METALWORKS™ Torsion Spring Interior and Exterior

smooth texture

Custom looks with Standard Products

SUSTAIN™
High Performance Sustainable Ceiling Systems

24/7 DEFEND™
Solutions for Healthier, Safer Spaces

CONTAIN CLEAN PROTECT

CAD/Revit® drawings at:
armstrongceilings.com/CAD-REVIT

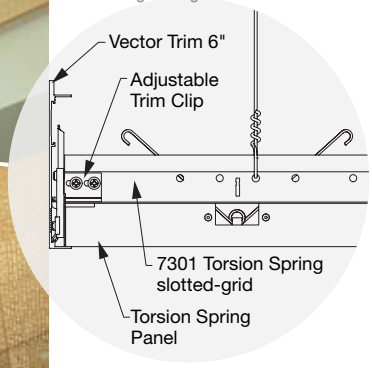

▲ MetalWorks™ Torsion Spring panels with custom perforations, dimensions, and wood look finish

CREATE!™
CUSTOM PERFORATIONS

armstrongceilings.com/metalworkscreate

Large-size concealed panels offer a monolithic visual with 100% downward accessibility.

KEY SELECTION ATTRIBUTES

- new Precise factory-cut downlight panels are fit and finish certified to integrate with USAI® Lighting BeveLED® 2.2 and BeveLED® Mini trimless downlights
- new CleanAssure™ family of products – includes disinfectable panels, suspension systems, and trim
- MetalWorks™ Torsion Spring is part of the Sustain™ portfolio and meets the most stringent industry sustainability compliance standards today
- Now available in 17 standard Effects™ wood look finishes for both interior and exterior applications
- Select products included in the FAST134 program – ready to ship in 4 weeks or less
- Transform your images onto custom perforated MetalWorks™ Create!™ ceiling and wall panels for a unique aesthetic plus acoustical performance
- 48" x 48" panels are available as a custom option (WHA, SIA, and MYA finishes only)
- Interior panels feature swing-down accessibility
- Exterior options available in 24 x 24 x 1-1/2" and 24 x 48 x 1-1/2" standard panel sizes
- Natural Reflections laminate finishes provide superior wood-look visual with printed vinyl bonded to aluminum; visuals other than the ones shown are also available
- NRC values up to 0.90 with fiberglass infill panels (select perforation patterns)

Now, Lighting Integration Made Easy

new

DOWNLIGHTING: MetalWorks™ Torsion Spring center cut panel with USAI® Lighting trimless downlight fixture. Integration details at armstrongceilings.com/downlighting

TechLine 877 276-7876
armstrongceilings.com/metalworkstorsionspring

Armstrong®
CEILING & WALL SOLUTIONS

METALWORKS™ Torsion Spring Interior and Exterior

smooth texture

SUSTAIN™
High Performance
Sustainable Ceiling Systems

Declare.

LEED® WELL™ LBC

UP TO 80% RECYCLED CONTENT

Calculate sustainability with GreenGenie™
armstrongceilings.com/greengenie

energy management	construction waste mgmt	regional materials	design for flexibility	EPD	recyclable/ extended producer resp.	biobased materials	recycled content	sourcing of raw materials	material ingredient reporting	low emitting/ materials	lighting quality	acoustics
	✔	✔	✔	✔			✔	✔		✔		✔

▲ LOCATION DEPENDENT

STANDARD COLORS & FINISHES

Due to printing limitations, shade may vary from actual product.

MetalWorks™ (Interior, Exterior)

Whitelume (WHA) · Silverlume (SIA) · Gun Metal (MYA)

(Interior Only)

Satin Anodized (SAA) · Lacquer Mill (LMA) · Brushalume (BAA)

These colors are part of the Sustain™ portfolio

new Natural Reflections Laminate Finishes (Interior Only)

Cool Maple (LCM) · Honest Maple (LHS) · Honey Maple (LHM) · Spring Cherry (LSC) · Beloved Oak (LBO) · English Walnut (LEW) · Midnight Forest (LMD)

These colors are part of the Sustain™ portfolio

Effects™ Classic* (Interior)

Effects Cherry (FXCH) · Effects Dark Cherry (FXDC) · Effects Oak (FXOK) · Effects Walnut (FXWN) · Effects Walnut Espresso (FXWE)

new Effects™ Bold* (Interior)

Effects Sea Salt (FXSS) · Effects Ginger (FXGR) · Effects Nutmeg (FXNM) · Effects Poppy Seed (FXPS) · Effects Peppercorn (FXPC) · Effects Almond (FXAL)

new Effects™ Subtle* (Interior)

Effects Sesame (FXSE) · Effects Macadamia (FXMA) · Effects Cinnamon (FXCM) · Effects Flax (FXFL) · Effects Cocoa Bean (FXCB) · Effects Coriander (FXCO)

*** Panels with Effects finishes are available as standard for 24" x 48" panels in M1 and M16 perforations for interior only. All other sizes, perforations, and exterior finishes are available as custom options.**

STANDARD PERFORATION OPTIONS

(1:2 scale shown)

M1 (Unperforated) · M14 (Rg 3205) · M15 (Rd 1612) · M16 (Rd 1607) · M17 (Rv 3223) · M18 (Rd 3210) · M19 (Rg 3220)

These perforations are part of the Sustain™ portfolio

CUSTOM COLORS & FINISHES

Due to printing limitations, shade may vary from actual product.

Custom Colors Available

Effects finishes available as custom option for exterior panels, and all other interior panel sizes & perforations (except 24" x 48", M1 & M16)

For custom options contact ASQuote,
ASQuote@armstrongceilings.com

PERFORATION OPTIONS

Custom Perforations Available

Create!™ Custom Perforations Available

METALWORKS™ — Standard

METALWORKS™ Torsion Spring Interior and Exterior

smooth texture

SUSTAIN™ High Performance Sustainable Ceiling Systems

Declare.

LEED® WELL™ LBC

UP TO 80% RECYCLED CONTENT

Calculate sustainability with GreenGenie™ armstrongceilings.com/greengenie

energy management	construction waste mgmt	regional materials	design for flexibility	EPD	recyclable/ extended producer resp.	biobased materials	recycled content	sourcing of raw materials	material ingredient reporting	low emitting/ materials	lighting quality	acoustics
	✔	✔	✔	✔			✔	✔		✔		✔

▲ LOCATION DEPENDENT

VISUAL SELECTION

PERFORMANCE

Dots represent high level of performance.

	Item No. ◆	Dimensions (Inches) W x L x H Custom Sizes Available	Fire Performance**	Light Reflect*	Springs per Panel	CleanAssure™ Disinfectable Panels: Fog	Spray	Wipe
METALWORKS™ Torsion Spring Interior Panels Square 15/16"	7209_ _ _ _ _ _	24 x 24 x 1-1/2"	Class A/ Class B	0.75	4	•	•	•
	7210_ _ _ _ _ _	24 x 48 x 1-1/2"	Class A/ Class B	0.75	4	•	•	•
	7211_ _ _ _ _ _	24 x 72 x 1-1/2"	Class A/ Class B	0.75	6	•	•	•
	7212_ _ _ _ _ _	24 x 96 x 1-1/2"	Class A/ Class B	0.75	6	•	•	•
	7213_ _ _ _ _ _	30 x 30 x 1-1/2"	Class A/ Class B	0.75	4	•	•	•
Exterior Panels Square 15/16"	7225_ _ _ _ _ _	24 x 24 x 1-1/2"	Class A/ Class B	0.75	4	•	•	•
	7226_ _ _ _ _ _	24 x 48 x 1-1/2"	Class A/ Class B	0.75	4	•	•	•

FAST134 program items ready to ship from manufacturer in 4 weeks or less.
Up-to-date lead times and product options (sizes and colors) at armstrongceilings.com/fast134.

NOTE: 48" x 48" panels are available as a custom option (WHA, SIA, and MYA finishes only)

◆ When specifying or ordering, include the appropriate perforation and color suffix with the item number (e.g., 7209 M 1 4 L M A).

* Light reflectance is for unperforated Whitelume.

** Class A fire rating on MetalWorks painted finishes and Class B on laminate finishes.

ACOUSTICAL INFORMATION

Perforation		NRC with acoustical fleece	NRC with 1" fiberglass infill ††
M1†	Unperforated	N/A	N/A
M14†	Rg 3205	0.55	0.85 •
M15	Rd 1612	0.70 •	0.90 •
M16	Rd 1607	0.70 •	0.80 •
M17†	Rv 3223	0.75 •	0.90 •
M18†	Rd 3210	0.65	0.85 •
M19†	Rg 3220	0.75 •	0.90 •

† Available for exterior applications

†† Maximum NRC achieved with acoustical infill (item 8200T10 or 5823).

For infill panel information, visit armstrongceilings.com/mwaccessories

EXAMPLE: **7209 M14 LMA**

Panel Item — Perforation: M14 Round Straight Rg 3205 — Finish: Lacquer Mill

PHYSICAL DATA

Material
Aluminum – thickness 0.040"
Aluminum – thickness 0.060" (Item 7226 only)

Surface Finish
Natural Reflections™: PVC free laminates
Painted finishes: Factory-applied polyester paint. Effects™ Wood Looks powder-coated, post-production finishes. Custom colors and finishes available.

Fire Performance
Painted aluminum finishes:
Class A: ASTM E84. Flame Spread Index 25 or less. Smoke Developed Index 50 or less.

Laminate finishes:
Class B: ASTM E84. Flame Spread Index 75 or less. Smoke Developed Index 450 or less.

ASTM E1264 Classification
Painted aluminum finishes:
Unperforated: ASTM E1264 Type XX Pattern G Fire Class A
Perforated - ASTM E1264 Type XX Pattern C Fire Class A

Laminate finishes:
Unperforated - ASTM E1264 Type XX Pattern G Fire Class B
Perforated - ASTM E1264 Type XX Pattern C Fire Class B

Acoustical Options
Perforated panels are supplied with a black fiberglass fleece to absorb sound.

Recycled Content
Minimum 25%. Up to 80% recycled content available.

Code Considerations
The International Mechanical Code requires that materials used in forming part of an air plenum, have a Flame Spread Rating 25 or less and a Smoke Developed Index 50 or less on all surfaces of the material including those surfaces that may be exposed by cutting the material. Exception: The IBC states, "Materials having a thickness less than 0.036 inches (0.9mm) applied directly to the surface of walls or ceilings shall not be required to be tested." Panels finished with Reflections™ laminates and paint finishes typically have a thickness less than 0.036 inches (0.9mm). These finishes are applied directly to the Class A aluminum substrate.

Design Considerations
Anodized and Lacquer Mill finishes may vary in shade between production runs as well as over time. Sizes can be mixed and matched on non-perforated panels only.

30" x 30" panels have a directional finish that is perpendicular to the main beams; all other panel sizes have a directional finish that is parallel to the main beams.

MetalWorks™ steel and aluminum panels are made at different manufacturing facilities that use different paint systems. Because of this, similar colors, i.e., White and Whitelume, are not exact color matches. Please consider this when designing adjacent spaces with multiple MetalWorks products.

Wind Uplift Performance
24" x 24" and 24" x 48" panels noted for exterior flat applications tested for wind uplift Classes 30, 60, and 90. Specific installation instructions to meet these classes are available.

For more information, visit armstrongceilings.com or contact TechLine customer support at 1 877 276-7876.

Design Support
Project management assistance is available by calling TechLine customer support at 1 877 276-7876.

Seismic Restraint
MetalWorks Torsion Spring panels have been engineered, tested, and approved for application in all seismic areas when installed per Armstrong Ceilings installation instructions.

Cleaning and Disinfecting
Cleaning and CDC approved disinfecting options available on armstrongceilings.com/cleaning

FAST134 Program Considerations
Size of Job Matters: Big jobs, over 2500 SF or 50 pieces for shapes/vertical elements will have longer lead times.

Location Matters: Transit time not included. We are ready to ship in 1 week on FAST1 items. However, transit to the states west of Wyoming may add time.

Distributor Truck Schedule Matters: We rely on distribution to help move products around the country. When speed matters, work with your local distributor to ensure FAST134 service.

Stock vs Made-to-Order Matters: FAST3 & FAST4 items are made-to-order and will ship direct to distributor. FAST1 (stocked items) will go through distribution and depend on distributor truck schedules.

Warranty
One (1) year limited warranty.
Details at armstrongceilings.com/warranty

Weight
0.69 lbs/SF
0.86 lbs/SF (Item 7226)

TechLine 877 276-7876
armstrongceilings.com/metalworkstorsionspring

Armstrong® CEILING & WALL SOLUTIONS

METALWORKS™ Torsion Spring Interior and Exterior

Installation Details

SUSTAIN™ High Performance Sustainable Ceiling Systems

Declare.

LEED® WELL™ LBC

UP TO 80% RECYCLED CONTENT

Calculate sustainability with GreenGenie™ armstrongceilings.com/greengenie

energy management	construction waste mgmt	regional materials	design for flexibility	EPD	recyclable/ extended producer resp.	biobased materials	recycled content	sourcing of raw materials	material ingredient reporting	low emitting/ materials	lighting quality	acoustics
	✔	✔	✔	✔			✔	✔		✔		✔

LOCATION DEPENDENT

HOW TO INSTALL PANELS

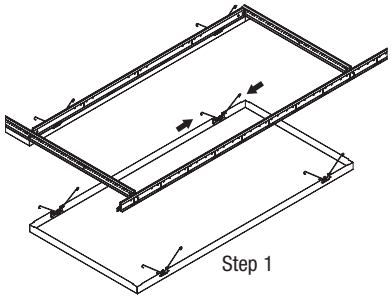

Step 1

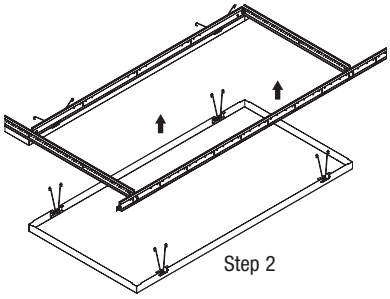

Step 2

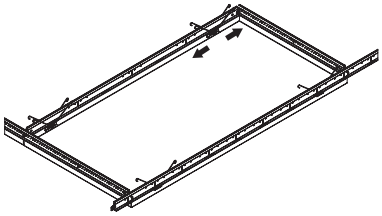

Step 3

INTERIOR INSTALLATION DETAILS

For exterior details, consult the MetalWorks™ Exterior Torsion Spring installation instructions, BPLA-297922, on our web site.

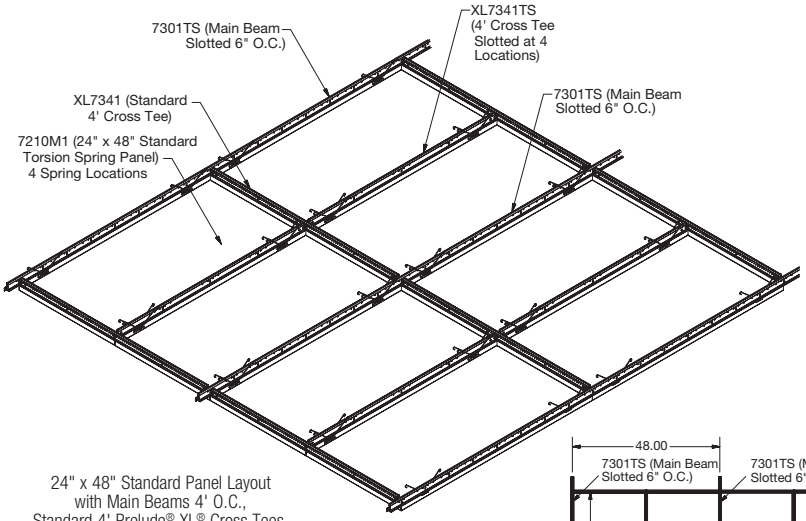

24" x 48" Standard Panel Layout with Main Beams 4' O.C., Standard 4' Prelude® XL® Cross Tees, 4' Slotted Cross Tees

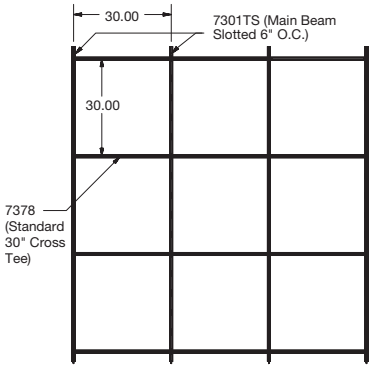

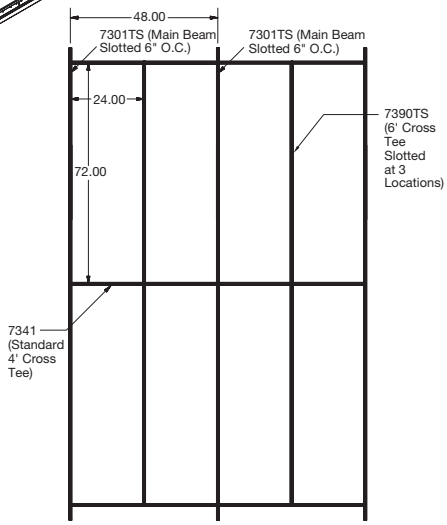

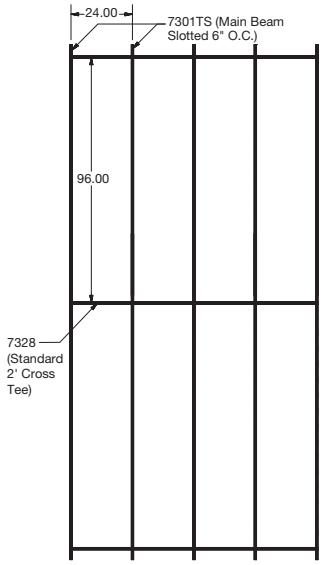

2x8 Grid Layout (Scale - 1:25)

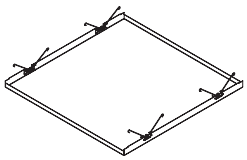

Suspension System Layout for 30" x 30" Panels

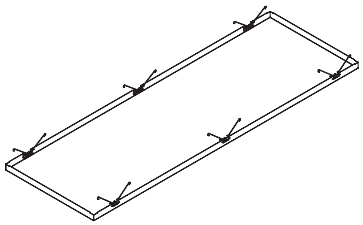

Suspension System Layout for 24" x 72" Panels

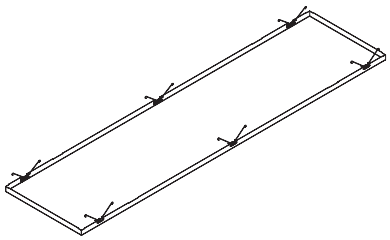

Suspension System Layout for 24" x 96" Panels

TechLine 877 276-7876
armstrongceilings.com/metalworkstorsionspring

Armstrong® CEILING & WALL SOLUTIONS

METALWORKS™ — Standard

METALWORKS™ Torsion Spring Interior and Exterior

Perimeter Details

SUSTAIN™ High Performance Sustainable Ceiling Systems

Declare.

LEED® WELL™ LBC

UP TO 80% RECYCLED CONTENT

Calculate sustainability with GreenGenie™ armstrongceilings.com/greengenie

energy management	construction waste mgmt	regional materials	design for flexibility	EPD	recyclable/ extended producer resp.	biobased materials	recycled content	sourcing of raw materials	material ingredient reporting	low emitting/ materials	lighting quality	acoustics
	✔	✔	✔	✔			✔	✔		✔		✔

LOCATION DEPENDENT

INTERIOR WALL PERIMETER DETAILS – For exterior details, consult the MetalWorks™ Exterior Torsion Spring installation instructions, BPLA-297922, on our web site.

Installation Detail – Wall Perimeter

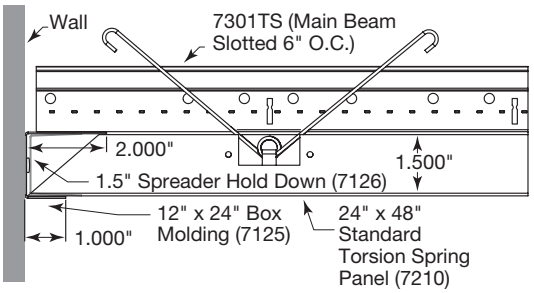

Installation Detail – Perimeter Trim (Formed Trim #7131)

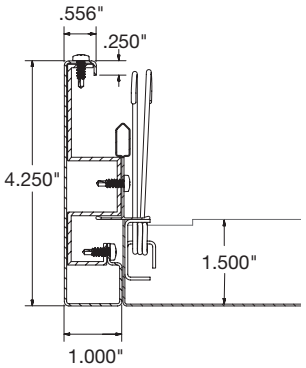

Installation Detail – Perimeter Trim (Extruded Trim #7147)

Full Panels

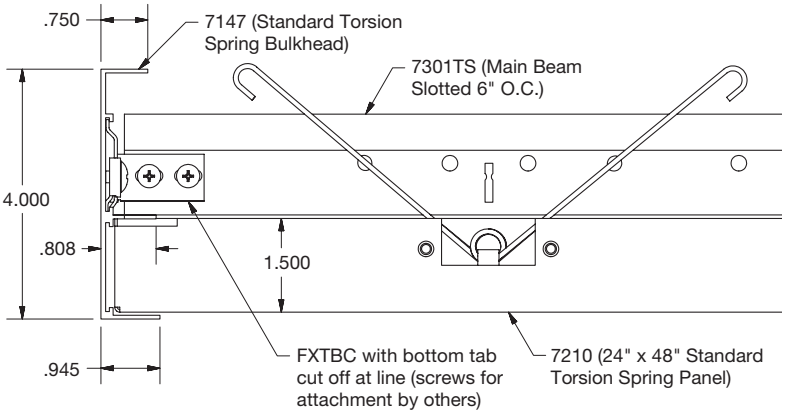

Cut Panels

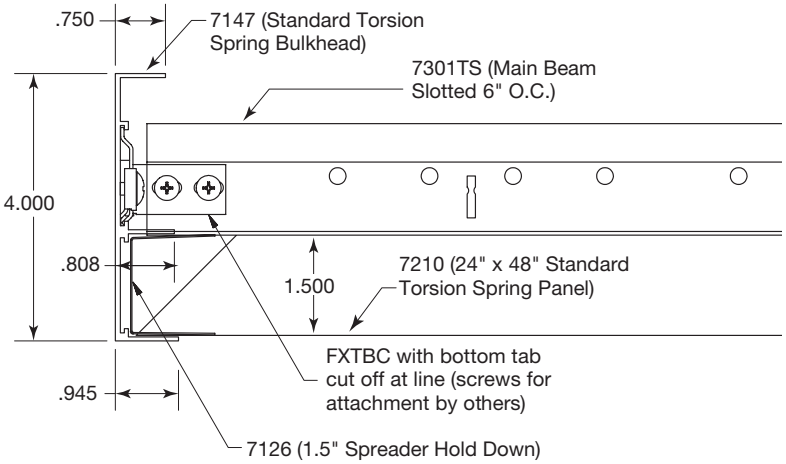

METALWORKS™ – Standard

METALWORKS™ Torsion Spring Interior and Exterior

Installation Details

SUSTAIN™ High Performance Sustainable Ceiling Systems

Declare.

LEED® WELL™ LBC

UP TO 80% RECYCLED CONTENT

Calculate sustainability with GreenGenie™ armstrongceilings.com/greengenie

energy management	construction waste mgmt	regional materials	design for flexibility	EPD	recyclable/ extended producer resp.	biobased materials	recycled content	sourcing of raw materials	material ingredient reporting	low emitting/ materials	lighting quality	acoustics
	✔	✔	✔	✔			✔	✔		✔		✔

▲ LOCATION DEPENDENT

ACCESSORIES

Item No. ◆	Description	Dimensions (Inches) Nominal W x L x H	Color	Pieces/ Carton
7125_ _ _	Box Molding (for Laminates, Black is recommended)	2 x 96 x 1-1/2"	WHA, SIA, MYA, SAA, LMA, BAA, BL	10
7147_ _	Torsion Spring Perimeter Trim (Extruded) (for Laminates, Black is recommended)	1 x 120 x 4"	WH, SG, MY, BL*	6
7131_ _ _	Torsion Spring Perimeter Trim (Formed)	1 x 96 x 4-1/4"	LMA, BAA, SAA	6
7126	Spreader Hold Down	1 x 10-5/8 x 1-1/2"	N/A	10
5823	BioAcoustic™ Infill Panel	24 x 24 x 5/8"	Black	12
8200T10	1" Fiberglass Infill Bag	24 x 24 x 1"	Black (Gloss)	12
7129	Torsion Spring Hook Access Tool	N/A	N/A	1
7130	Torsion Spring Suction Access Tool	N/A	N/A	1

◆ When specifying or ordering, include the appropriate color code with the item number (e.g. 7131 L M A)
* Coordinates with WHA, SIA, MYA Torsion Spring Panel finish

SUSPENSION SYSTEMS

	Item No.	Description	Dimensions (Inches)
15/16" Prelude® XL® Suspension System Some items slotted for Torsion Spring.	**7301TS**	Prelude XL 12' HD Main Beam – slotted for Torsion Spring	144 x 15/16 x 1-11/16"
	XL7341TS	Prelude XL 4' Cross Tee – slotted for Torsion Spring	48 x 15/16 x 1-11/16"
	XL7390TS	Prelude XL 6' Cross Tee – slotted for Torsion Spring	72 x 15/16 x 1-11/16"
	XL7378	Prelude XL 30" Cross Tee	30 x 15/16 x 1-3/8"
	XL8320	Prelude XL 2' Cross Tee	24 x 15/16 x 1-11/16"
	XL7341	Prelude XL 4' Cross Tee	48 x 15/16 x 1-11/16"
Exterior Suspension System	**7301G90ATS**	Prelude XL 12' HD Exterior Main Beam – slotted for Torsion Spring	144 x 15/16 x 1-11/16"
15/16" Prelude XL Some items slotted for Torsion Spring.	**XL7341G90ATS**	Prelude XL 4' Exterior Cross Tee – slotted for Torsion Spring	48 x 15/16 x 1-11/16"
	XL7321G90A	Prelude XL 2' Exterior Cross Tee	24 x 15/16 x 1-11/16"

TechLine / 1 877 276-7876
armstrongceilings.com/metalworkstorsionspring

BPCS-5121-521

LEED® is a registered trademark of the U.S. Green Building Council; Declare™ and Living Building Challenge® (LBC) are trademarks of the International Living Future Institute®; WELL™ and Well Building Standard are trademarks of the International WELL Building Institute; USAI® and BeveLED® are registered trademarks of USAI, LLC; all other trademarks used herein are the property of AWI Licensing LLC and/or its affiliates © 2021 AWI Licensing LLC

Armstrong® CEILING & WALL SOLUTIONS

LIGHTING SOLUTIONS

METALWORKS™ Torsion Spring

Center Cut Panels for Recessed Downlighting
smooth texture

MetalWorks Torsion Spring panels with USAI® Lighting BeveLED® Mini for MetalWorks trimless downlight

Pre-cut durable, metal ceiling panels are designed to seamlessly integrate with trimless downlights. Perfectly centered fixtures, perfectly cut tiles - every time.

KEY SELECTION ATTRIBUTES

- Perfectly centered USAI® Lighting fixtures for flush fit visual
- Time and labor savings solution - downlight fixtures are fully adjustable within the system so there is no cutting, no mess, and no need to remove panels
- Entire system helps contribute to healthier spaces, part of CleanAssure™ portfolio
- Clean, minimal trimless appearance in durable, factory-cut metal panels
- Pre-cut Torsion Spring panels available in FAST134 program
- Pre-engineered and tested for fit and finish in all seismic areas
- Center cut panels allow for perfectly centered lights within the panel. For offset factory-cut panels, contact ASQuote@armstrongceilings.com. Custom grid layouts are possible depending on lighting layout.

COLORS

Due to printing limitations, shade may vary from actual product.

MetalWorks™ (Interior)

Whitelume (WHA) | Silverlume (SIA) | Gun Metal (MYA)

These colors are part of the Sustain™ portfolio

PERFORATION OPTIONS (1:2 scale shown)

M1 (Unperforated) | M15 (Rd 1612) | M16 (Rd 1607)

These perforations are part of the Sustain™ portfolio

VISUAL SELECTION

	MetalWorks™ Torsion Spring Panel Item No.	Panel Description	USAI® Fixture Dimension (Nominal)	Coordinating USAI® Fixture Family	Coordinating USAI Fixture Part No.	USAI Grid Mounting Bars Item No.
METALWORKS™ Torsion Spring	7209_ _ _ C03_ _ _	24" x 24" x 1-1/2"	3.5" Square Downlight	BeveLED® Mini for MetalWorks™	B3SXP-UA	UA2
	7209_ _ _ C04_ _ _	24" x 24" x 1-1/2"	5" Square Downlight	BeveLED® 2.2 for MetalWorks	B4SXP-UA	UA2
	7210_ _ _ C03_ _ _	24" x 48" x 1-1/2"	3.5" Square Downlight	BeveLED Mini for MetalWorks	B3SXP-UA	UA2 or UA4
	7210_ _ _ C04_ _ _	24" x 48" x 1-1/2"	5" Square Downlight	BeveLED 2.2 for MetalWorks	B4SXP-UA	UA2 or UA4
	7211_ _ _ C03_ _ _	24" x 72" x 1-1/2"	3.5" Square Downlight	BeveLED Mini for MetalWorks	B3SXP-UA	UA2
	7211_ _ _ C04_ _ _	24" x 72" x 1-1/2"	5" Square Downlight	BeveLED 2.2 for MetalWorks	B4SXP-UA	UA2
	7212_ _ _ C03_ _ _	24" x 96" x 1-1/2"	3.5" Square Downlight	BeveLED Mini for MetalWorks	B3SXP-UA	UA2
	7212_ _ _ C04_ _ _	24" x 96" x 1-1/2"	5" Square Downlight	BeveLED 2.2 for MetalWorks	B4SXP-UA	UA2

FAST 4 WEEKS or Less

FAST134 program items ready to ship from manufacturer in 4 weeks or less.
Up-to-date lead times and product options (sizes and colors) at armstrongceilings.com/fast134.

NOTE: Refer to lighting partner cut sheets for light location considerations. For Torsion Spring Downlight item numbers, add the perforation following the base item number, and then add the 3-digit finish code. (ie: 7209 M 1 5 C 0 3 S I A)

INSTALLATION DETAILS

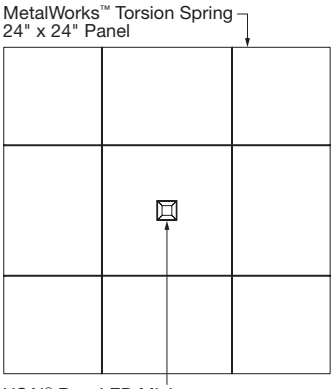

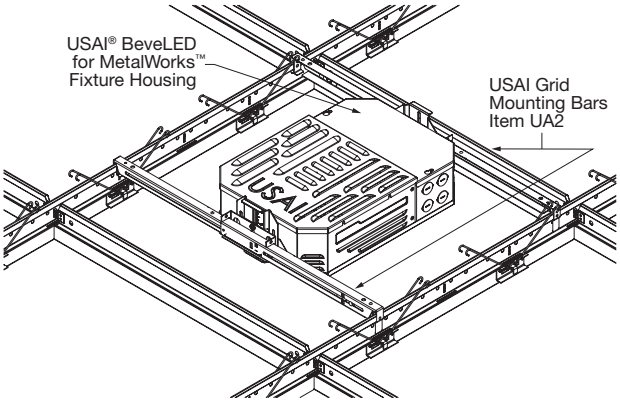

LIGHTING FIXTURES

Compatible with USAI® Lighting BeveLED® 2.2 and BeveLED® Mini MetalWorks fixture families.

USAI® Lighting

For detailed lighting information, contact your local USAI® representative or visit usailighting.com/metalworks for more information

METALWORKS™ – Standard

TechLine / 1 877 276-7876
armstrongceilings.com/downlighting

BPCS-5121-521

LEED® is a registered trademark of the U.S. Green Building Council; Declare™ and Living Building Challenge® (LBC) are trademarks of the International Living Future Institute®; WELL™ and Well Building Standard are trademarks of the International WELL Building Institute; USAI® and BeveLED® are registered trademarks of USAI, LLC; all other trademarks used herein are the property of AWI Licensing LLC and/or its affiliates © 2021 AWI Licensing LLC

Armstrong® CEILING & WALL SOLUTIONS