ACOUSTICS and Mass Timber

Inspiring Great Spaces®

Armstrong®
CEILING SOLUTIONS

BEAUTY & ACOUSTICS
in Mass Timber

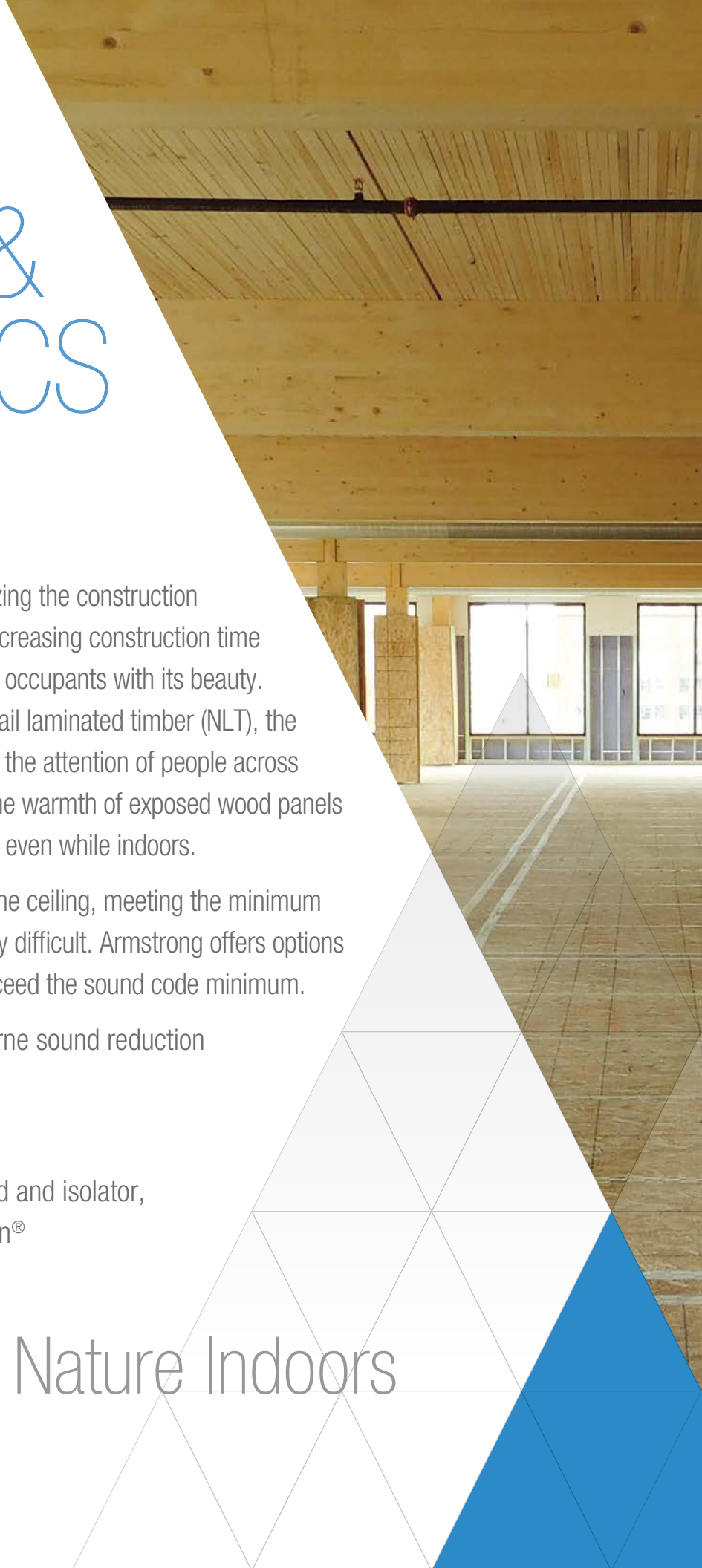

Mass timber construction is revolutionizing the construction industry by increasing sustainability, decreasing construction time and labor requirements and captivating occupants with its beauty. From cross laminated timber (CLT) to nail laminated timber (NLT), the mass timber category is rapidly gaining the attention of people across the globe. Its appeal is undeniable… the warmth of exposed wood panels gives occupants a connection to nature even while indoors.

When Mass Timber is left exposed as the ceiling, meeting the minimum code for sound transmission will be very difficult. Armstrong offers options to reduce sound transfer to meet or exceed the sound code minimum.

- Offers significant impact and airborne sound reduction
- Fast and easy installation
- Verified through sound testing
- Includes: Armstrong IIC Drywall grid and isolator, ACOUSTIBuilt™ Ceiling, and Maxxon® Acousti-Mat solutions

Connection to Nature Indoors

ACOUSTICS and MASS TIMBER

Section 1206 of the International Building Code (IBC) lists requirements for acoustical performance of floor/ceiling assemblies between adjacent dwelling and sleeping units or adjacent public areas such as corridors or service areas. These assemblies must have minimum Sound Transmission Class (STC) and Impact Insulation Class (IIC) ratings of 50. Occupancies such as offices, schools, and hospitals do not fall under the scope of these requirements, however acoustical performance guidelines still exist.

What is STC?

Sound Transmission Class

STC measures how effectively a wall or floor/ceiling assembly isolates airborne sound and reduces the level that passes from one side to the other. Examples of airborne sound include talking and sounds from a radio or television.

What is IIC?

Impact Insulation Class

IIC measures how effectively a floor/ceiling assembly blocks impact sound from passing through a floor/ceiling. Just as STC is a measure of airborne sound reduction, IIC is a way to quantify structure-born noise. Examples of impact sound include foot falls (walking/running/jumping) and objects dropping on the floor.

It is important to note that products to not receive STC or IIC ratings as stand-alone materials. These ratings are used to describe an entire assembly. The combination of multiple products and systems is what contributes to an effective floor/ceiling assembly.

Trust Armstrong® Drywall Grid tested assemblies to meet or exceed IBC – STC/IIC sound isolation requirements

STC IIC PERFORMANCE GUIDELINES

Changes in STC/IIC Ratings	Description
+ / - 1	Almost perceptible
+ / - 3	Just perceptible
+ / - 5	**CLEARLY PERCEPTIBLE**
+ / - 10	Twice (or half) as loud

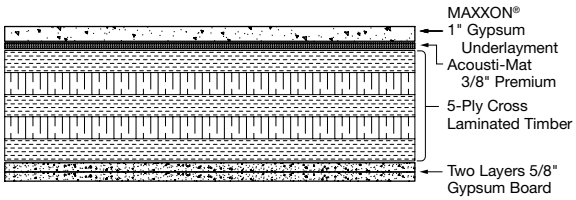

Assembly With No Suspended Ceiling

STC	IIC
52	46

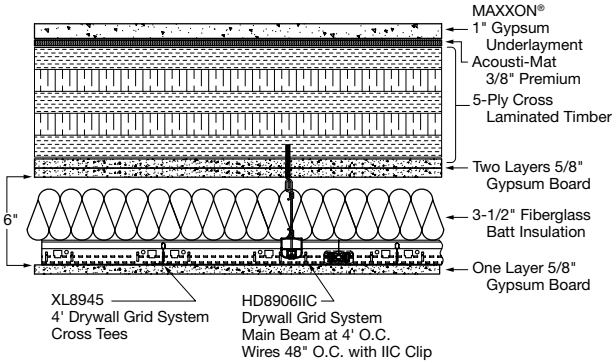

Suspended Ceiling With Gypsum Board

STC	IIC
63	60

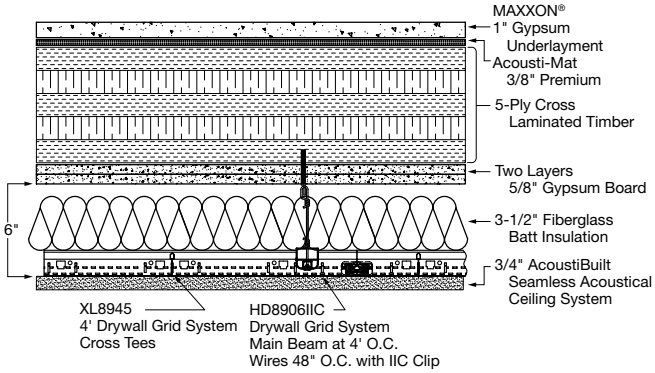

Suspended Ceiling With ACOUSTIBuilt™

STC	IIC
63	59

ACOUSTIBUILT™
Seamless Acoustical Ceiling System

SOUND SOLUTION DETAILS

The ACOUSTIBuilt™ seamless acoustical ceiling system looks like and installs like drywall but has been engineered to absorb and block sound using an acoustically transparent fine texture finish that is applied in layers to allow sound to pass through and be absorbed by the mineral fiber ACOUSTIBuilt panels. The ACOUSTIBuilt panels are screw attached to standard Armstrong® Drywall Grid System, then joints are finished just like drywall.

▼ ACOUSTIBuilt™ Cloud installation; Vincennes University, Vincennes, IN

ACOUSTIBuilt: click to see more

DRYWALL GRID
Sound Isolation Solution

Impact Isolation Clip for use with HD8906IIC drywall grid main beam. Provides IIC improvement in assemblies including Mass Timber to ensure your project meets IBC requirements.

Clip Color: Natural

IIC Clip must be used with HD8906IIC Drywall Grid Main Beam.

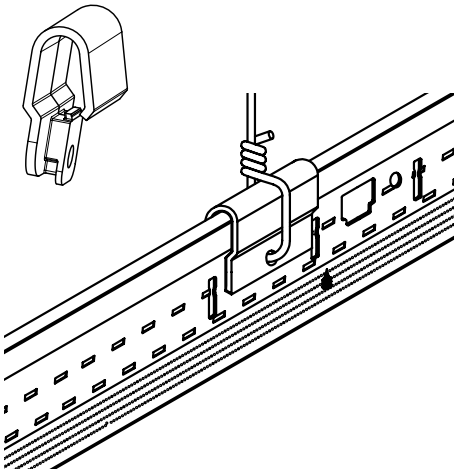

DRYWALL/ STUCCO/PLASTER
Flat Ceilings

Eliminate the labor-intensive cutting, tying, and spacing of track and channel framing. Our systems are engineered with rout locations and cross tees to maintain precise module spacing. Pre-notched main beams simplify curved drywall installations. Our Drywall Systems are manufactured to meet or exceed ASTM standards and code requirements, and are engineered to provide economical alternatives to stud and track construction. Create inspiring designs with Armstrong® integrated linear lighting solutions for Drywall and ACOUSTIBuilt™.

▼ Linear Lighting for Drywall and ACOUSTIBuilt™

SYSTEM OVERVIEW

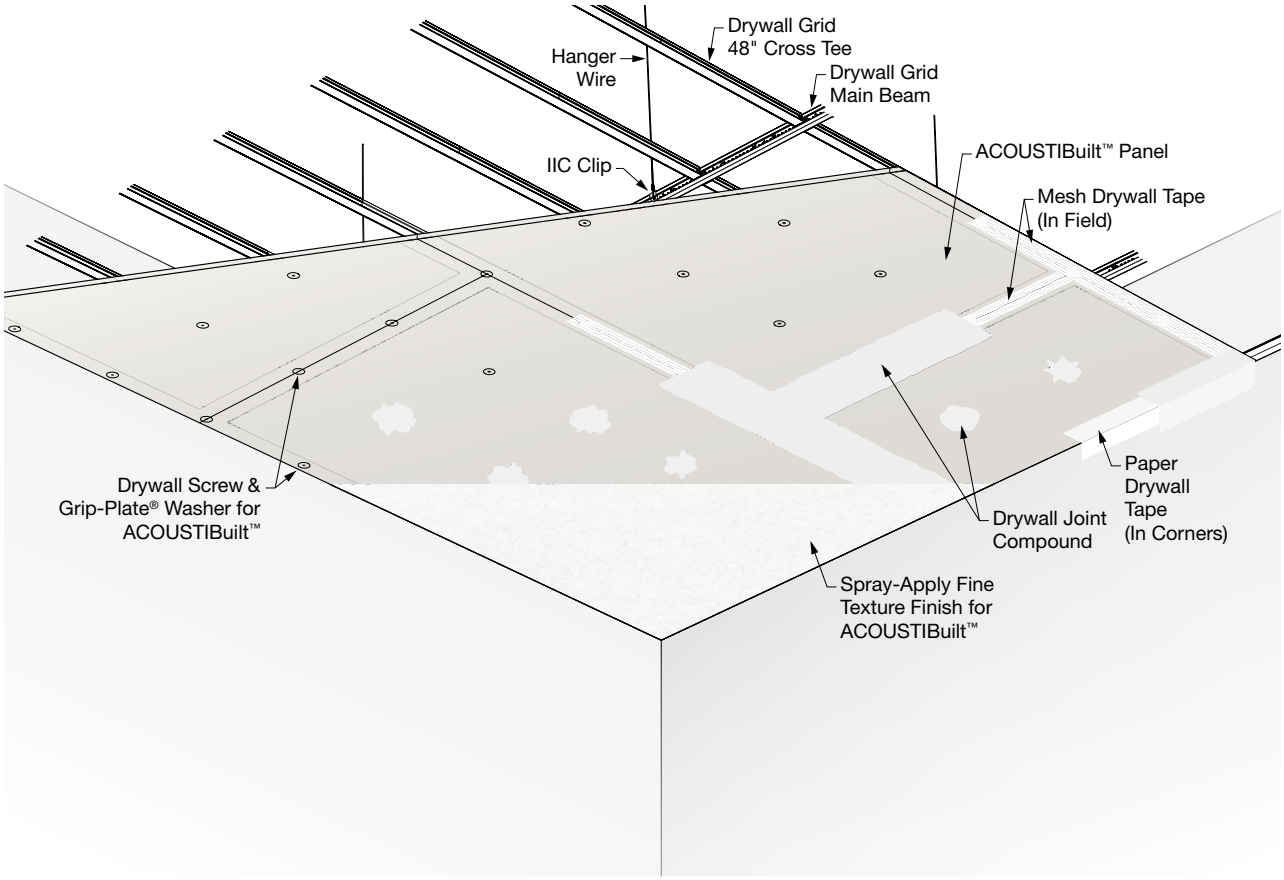

SOUND ABSORPTION COMPARISON

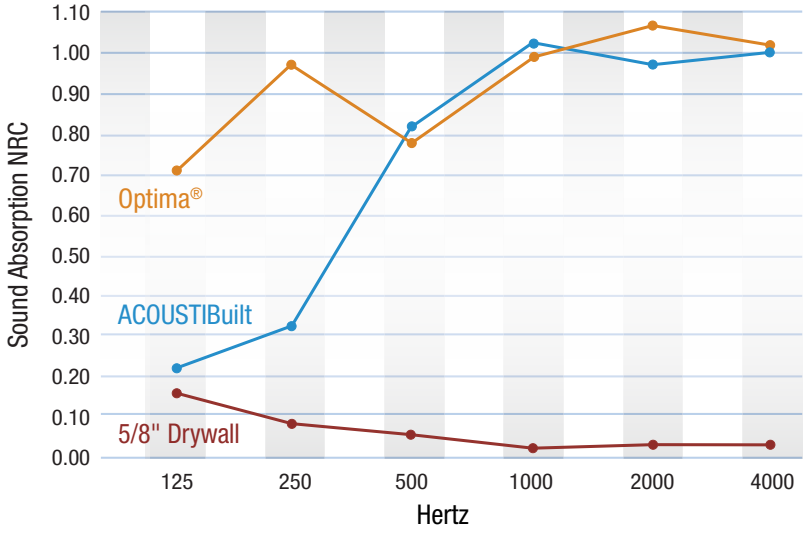

0.90 NRC Optima 2 x 2' acoustical ceiling
0.80 NRC ACOUSTIBuilt™ system
0.05 NRC 1 layer 5/8" Drywall on drywall grid

The ACOUSTIBuilt™ Seamless Acoustical ceiling system combines excellent acoustical, sustainability, and MEP integration attributes for mass timber building applications. When installed with Armstrong Drywall Grid using the IIC clip you can achieve an excellent combination of sound absorption (NRC) and sound blocking (CAC) along with high performance Airborne sound isolation (STC) and Impact sound isolation (IIC) to meet or exceed international building code requirements.

▲ ACOUSTIBuilt™ Ceiling System; SpinaORourke & Partners, West Palm Beach, FL

ACOUSTIBUILT VS. DRYWALL ACOUSTICAL COMPARISON

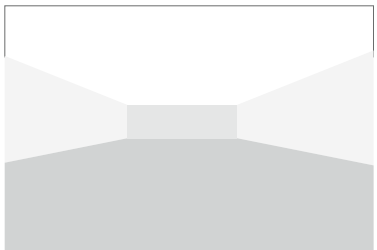

900 SF Hotel Room, 9' ceiling, drywall walls, commercial carpet	5/8" Drywall Ceiling	ACOUSTIBuilt™ Seamless Acoustical Ceiling System
CAC	50	48
STC (Mass Timber)	63	63
IIC (Mass Timber)	60	59
Sound Absorption	0.05	0.70
Reverberation Time	1.26	0.38
Total Acoustics®	N/A	**BEST**

* 1.33 Sabins/SF achieved using infill panel item 8200T10

TAKE THE NEXT STEP

1 877 276-7876

Customer Service Representatives
7:45 a.m. to 5:00 p.m. EST Monday through Friday

TechLine – Technical information, detail drawings, CAD design assistance, installation information, other technical services – 8:00 a.m. to 5:30 p.m. EST, Monday through Friday. FAX 1 800 572 8324 or email: techline@armstrongceilings.com

You Inspire™ Solutions Center
1 800 988 2585
email: solutionscenter@armstrongceilings.com
armstrongceilings.com/youinspire

you inspire™
solutions center

helping to bring your one-of-a-kind ideas to life

armstrongceilings.com/commercial

Latest product news

Standard and custom product information

Online catalog

CAD, Revit®, SketchUp® files

A Ceiling for Every Space® Visual Selection Tool

Product literature and samples – express service or regular delivery

Contacts – reps, where to buy, who will install

armstrongceilings.com/dgs

Inspiring Great Spaces®

Armstrong® CEILING SOLUTIONS

BPCS-6278-920