ACOUSTIBUILT™ Seamless Acoustical Ceiling System Design Guide

Inspiring Great Spaces®

Armstrong® CEILING SOLUTIONS

Smooth and CLEAN Monolithic Visual

The ACOUSTIBuilt™ seamless acoustical ceiling system provides the clean monolithic visual of a drywall ceiling with Total Acoustics® & Sustain® performance. ACOUSTIBuilt combines excellent acoustical performance and sustainability attributes with efficient installation in wall-to-wall and cloud applications for any space.

- Excellent acoustical performance of up to NRC 0.80 and CAC 46
- Use ACOUSTIBuilt for wall-to-wall, cloud, sloped, or soffit applications
- Smooth non-directional, monolithic, drywall-like visual (Level 4 equivalent finish)
- Add a hint of color, tailored to your design palette
- Quick, easy panel installation using Armstrong® Drywall Grid System
- Faster and easier to install & repair than acoustical plaster at a lower cost

Seamless and Monolithic

ACOUSTIBuilt™ Cloud installation
Vincennes University
Vincennes, IN

▲ ACOUSTIBuilt™ Ceiling System; Interstate Drywall Corporate Office

Acoustics & AESTHETICS

The ACOUSTIBuilt™ seamless acoustical ceiling system combines the monolithic look of traditional drywall with Total Acoustics® performance, the ideal combination of sound absorption and sound blocking. Sound absorption reduces noise while sound blocking keeps it from traveling into adjacent spaces. Together these attributes help you create quiet spaces.

ACOUSTIBuilt™ Seamless Acoustical Ceiling System

Total Acoustics® Performance

Now, whether you're creating a space for quiet concentration, collaboration, or confidentiality, one system meets the needs for today's flexible spaces.

TOTAL ACOUSTICS®
Sound Absorption (NRC) + Sound Blocking (CAC)

The ACOUSTIBuilt™ Seamless Acoustical ceiling system provides high sound absorption (NRC up to 0.80) and high sound blocking up to CAC 46 to achieve Total Acoustics® performance.

ACOUSTIBuilt cloud installations can enhance the design and acoustical performance of a space and will absorb sound from both the front and back surfaces.

ACOUSTIBuilt vs. Drywall Acoustical Comparison

5,000 SF Exposed Structure (50' x 100'), 15' to deck, drywall with windows on two sides, commercial carpet	5/8" Drywall Ceiling	ACOUSTIBuilt™ Seamless Acoustical Ceiling System	ACOUSTIBuilt™ Clouds 50% coverage – (equivalent to 2,500 SF of clouds)*	
Sound Absorption	0.05	0.80 NRC	0.80 Sabins/SF	1.33* Sabins/SF
CAC	50	46	N/A	N/A
Total Acoustics®	N/A	BEST	N/A	N/A
Reverberation Time	1.7 sec	0.5 sec	1.1 sec	0.7 sec
RT Improvement	–	71%	35%	59%
SPL Reduction	–	-3.7 dB	-2.7 dB	-3.7 dB

* 1.33 Sabins/SF achieved using infill panel item 8200T10

Sound Absorption Comparison

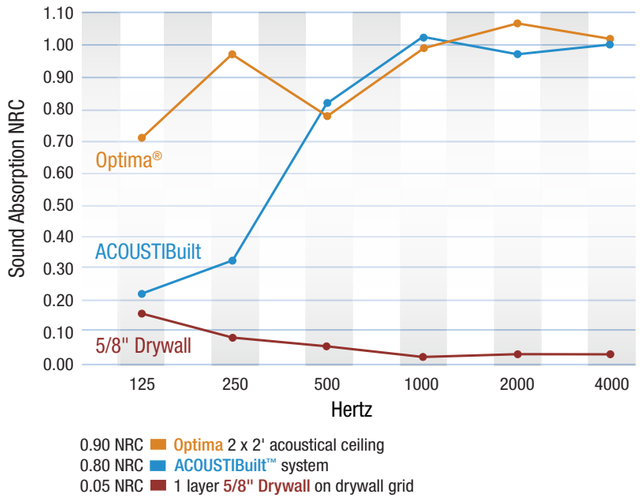

0.90 NRC Optima 2 x 2' acoustical ceiling
0.80 NRC ACOUSTIBuilt™ system
0.05 NRC 1 layer 5/8" Drywall on drywall grid

Installed Cost Comparison

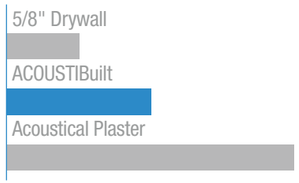

Sustain® Performance

ACOUSTIBuilt™ is part of the Sustain portfolio which helps contribute to better spaces.

- Contribute to LEED® v4 (including new Materials and Resources credits)
- Have Health Product Declarations (HPDs) which tell you what's in the products
- Are free of Red List chemicals per Living Building Challenge 3.0
- Have Declare® labels - easy reference "nutrition labels"
- Meet California Department of Public Health (CDPH) low emissions standards
- Have Environmental Product Declarations (EPDs) which tell you the impact of the products
- Contribute to Living Building Challenge
- Contribute to WELL Building Standard™
- USDA BioBased certification

mindful MATERIALS

USDA CERTIFIED BIOBASED PRODUCT
PRODUCT 95%

SUSTAIN®
High Performance
Sustainable Ceiling Systems
(White Only)

Declare.

GREENGUARD Gold Certified

▼ ACOUSTIBuilt™ Cloud installation; Vincennes University, Vincennes, IN

ACOUSTIBuilt™ Seamless Acoustical Ceiling System

System Overview

The ACOUSTIBuilt™ seamless acoustical ceiling system looks like and installs like drywall but has been engineered to absorb and block sound using an acoustically transparent fine texture finish that is applied in layers to allow sound to pass through and be absorbed by the mineral fiber ACOUSTIBuilt panels. The ACOUSTIBuilt panels are screw attached to standard Armstrong® Drywall Grid System, then joints are finished just like drywall.

▲ ACOUSTIBuilt™ Ceiling System; Armstrong Ceilings, Lancaster, PA

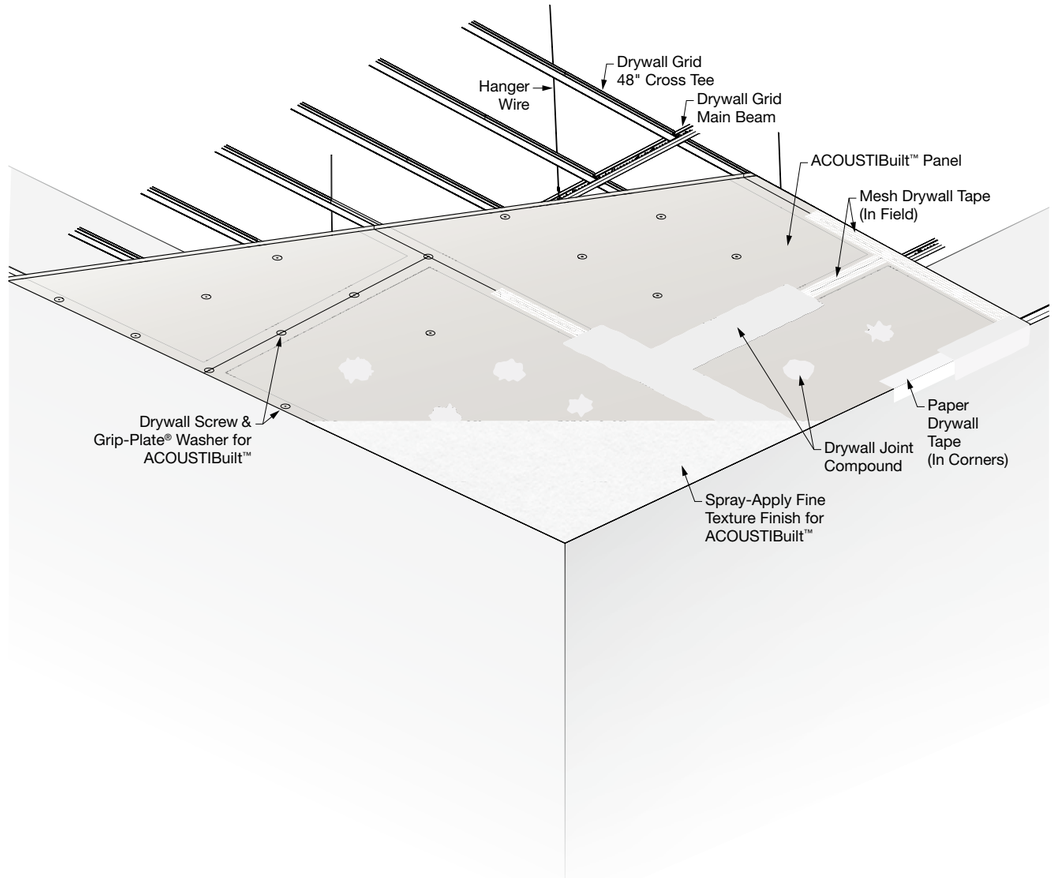

ACOUSTIBuilt™ Seamless Acoustical Ceiling System

The typical system layout below shows a standard wall-to-wall application of ACOUSTIBuilt™.

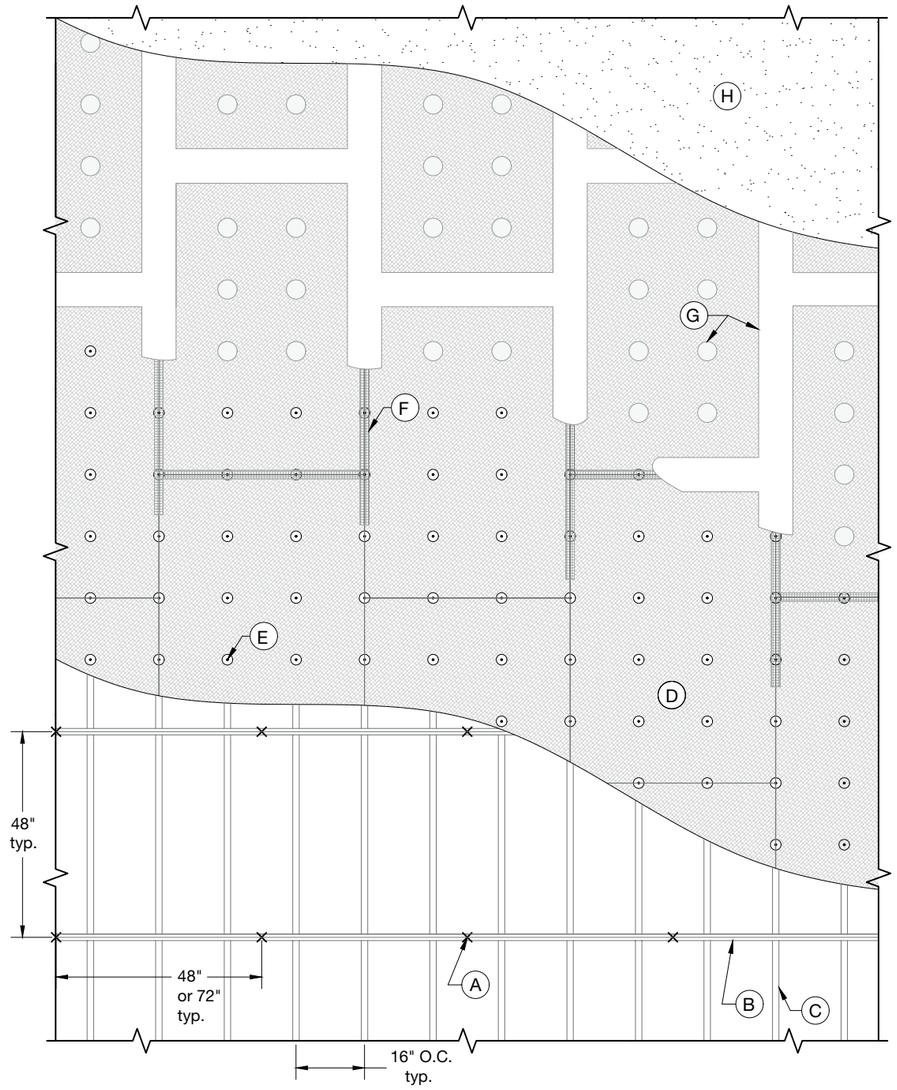

ACOUSTIBuilt™ Seamless Acoustical Ceiling System

Design Considerations

Applications – The ACOUSTIBuilt™ ceiling system can be used in almost any ceiling application where standard drywall is used, including flat, sloped, soffit or cloud installations. ACOUSTIBuilt is seismic D,E,F tested and approved. ACOUSTIBuilt cannot be installed in curved ceiling applications.

Color – The ACOUSTIBuilt Fine-Texture finish in White has a light reflectance value (LR) of 0.87. Custom Off-White tints are available to coordinate with your design palette. Due to the fine-texture visual, color may appear slightly different than a standard flat color sample. Choose light color tones with an LRV (light reflectance value) of 50 or greater.

Lighting – ACOUSTIBuilt is intended for spaces desiring a Level 4 equivalent drywall finish. Like Level 4 drywall, critical or low-angle light grazing across the ceiling can show imperfections. Special attention to finishing and sanding may be required. Downlights can complement the appearance in severe grazing light.

Acoustical Performance – Excessive ceiling integrations and/or small enclosed spaces where the ceiling is more compound than open area will result in degradation of sound absorption. Light tone colors may require an additional coat of Fine-Texture Finish, resulting in a slight degradation of sound absorption.

▲ ACOUSTIBuilt™ Ceiling System; Parker Poe, Charlotte, NC

ACOUSTIBuilt™ Seamless Acoustical Ceiling System

Design Details and Integration

ACOUSTIBuilt™ installed on Armstrong® Drywall Grid offers comparable compatibility to standard drywall and easily accommodates a wide variety of conventional and Armstrong partner light fixtures, HVAC diffusers, and access doors, and transitions to standard acoustical ceiling systems. The ACOUSTIBuilt Fine Texture finish can be used to coat most GRG or metal access panels/doors in order to maintain a consistent finished ceiling visual.

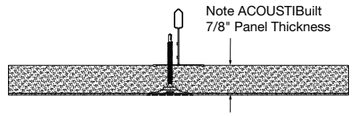

▲ ACOUSTIBuilt™ Ceiling System; SpinaORourke & Partners, West Palm Beach, FL

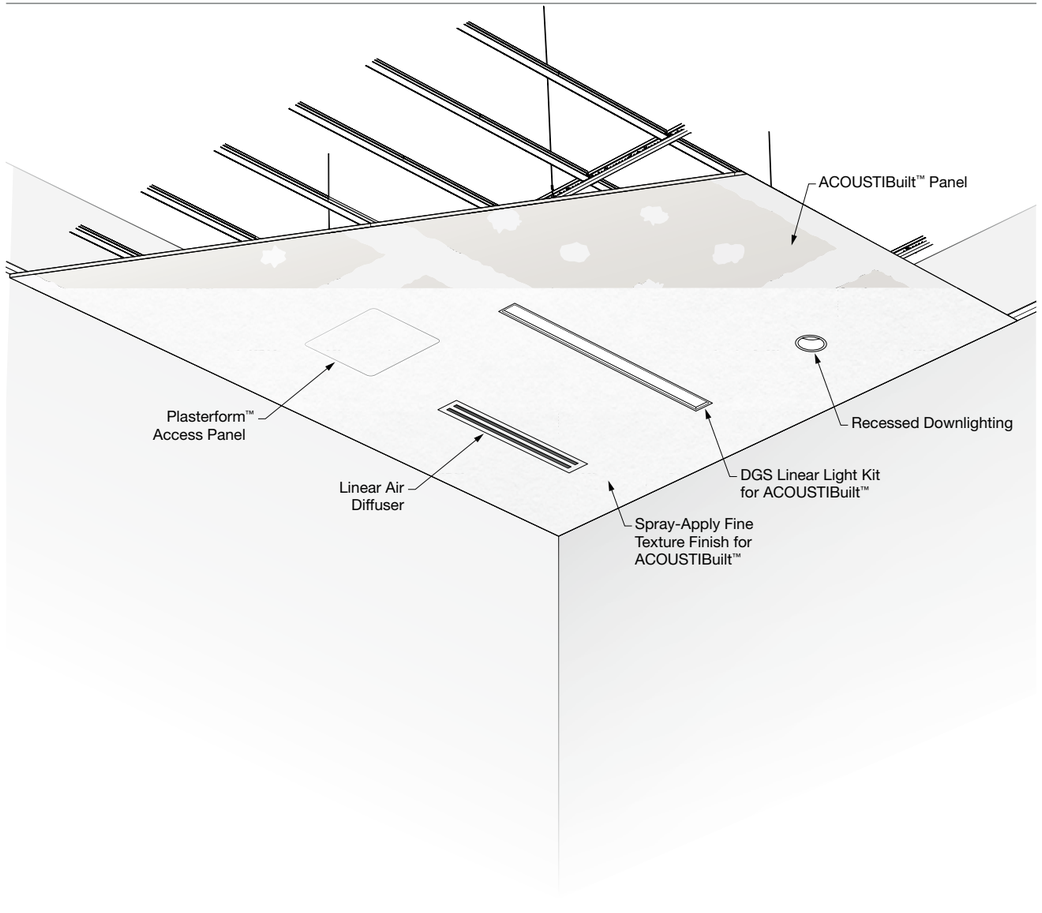

ACOUSTIBuilt™ Seamless Acoustical Ceiling System

Typical Details

ACOUSTIBuilt™ No Reveal at Wall

(Per ASTM C480, Section 20, ceilings without perimeter relief cannot exceed 30 LF and 900 SF between control joints)

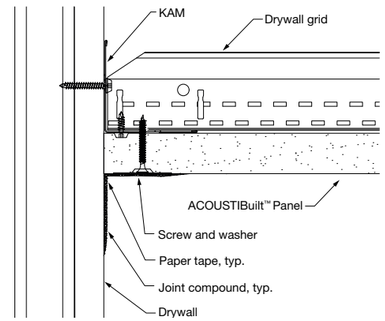

ACOUSTIBuilt Reveal at Wall

(Per ASTM C480, section 20, ceilings with perimeter relief cannot exceed 50 ln. ft. and 2,500 sq. ft. between control joints)

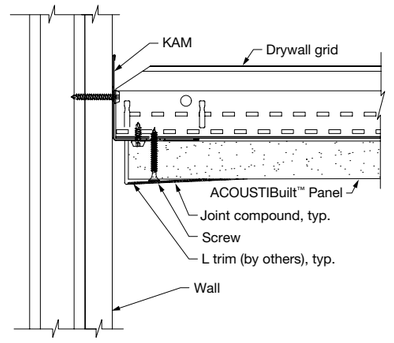

Expansion Joint

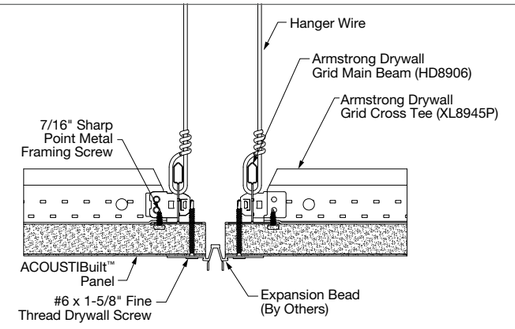

Control Joint

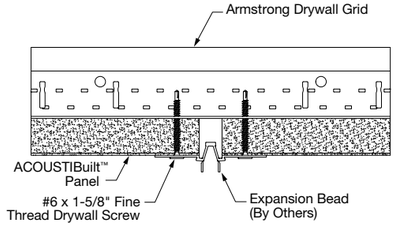

Download ACOUSTIBuilt Drawing Details Library >

Floating Edge Details

Axiom® One Piece Trim

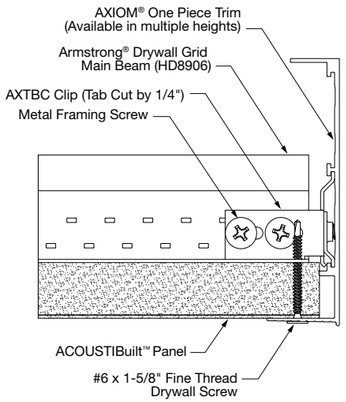

Axiom Classic with Axiom Bottom Trim for ACOUSTIBuilt™

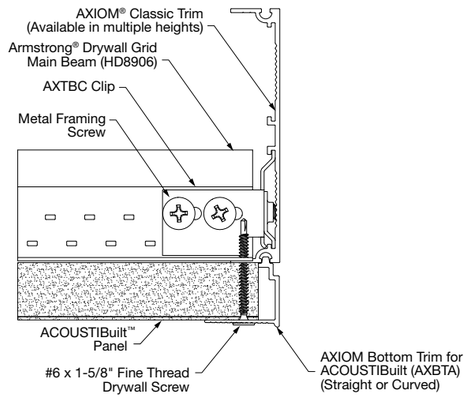

Axiom Angled Knife Edge® Trim

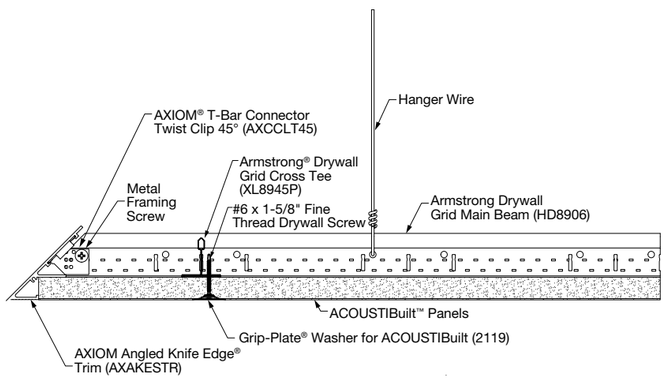

Download ACOUSTIBuilt Drawing Details Library >

Common Integration Details

ACOUSTIBuilt™ Sprinkler Integration

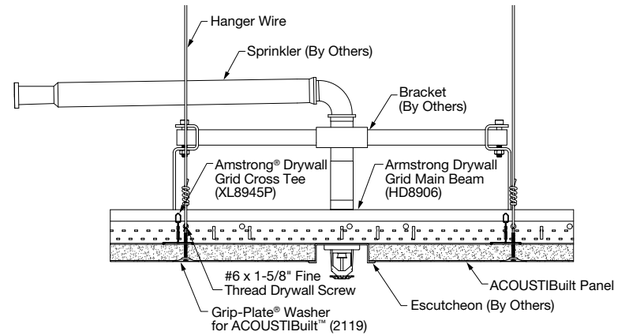

ACOUSTIBuilt with Plasterform™ GRG Access Panel

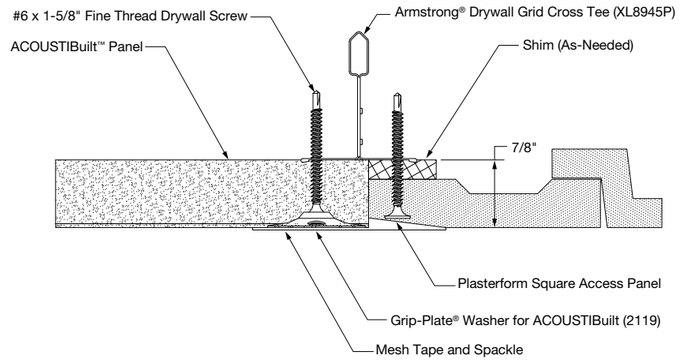

ACOUSTIBuilt with Axiom® Shade Pocket

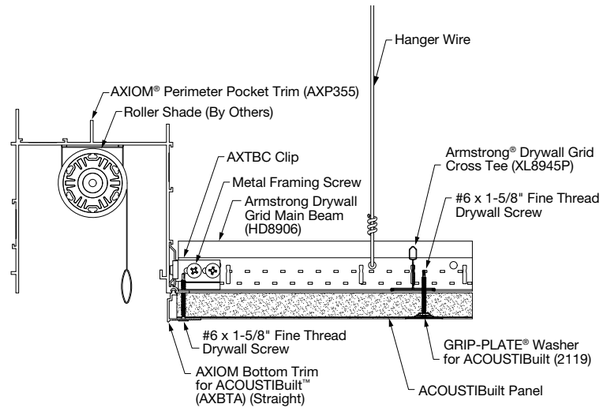

Download ACOUSTIBuilt Drawing Details Library >

Lighting Integration Details

Axiom® Linear Lighting Kit for ACOUSTIBuilt™ (Trimless)

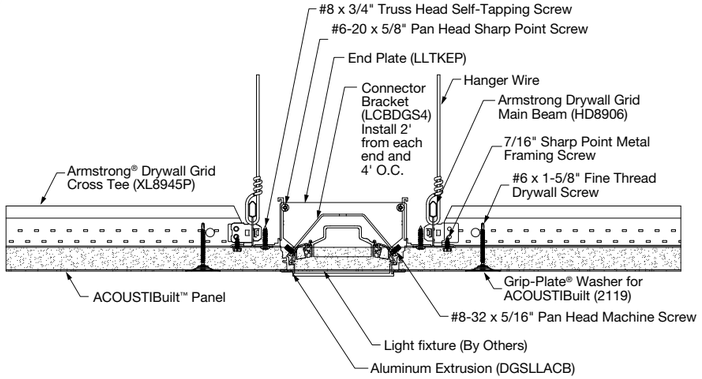

Downlighting Integration

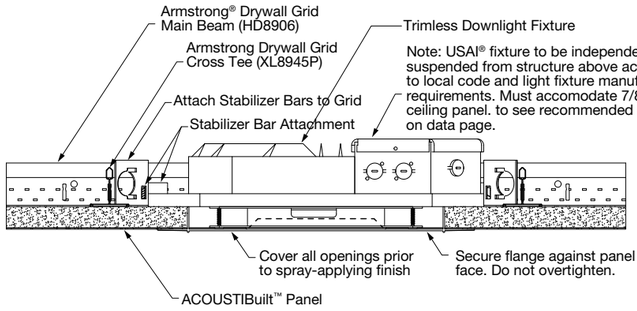

Axiom® Indirect Field Light Cove (Straight or Curved)

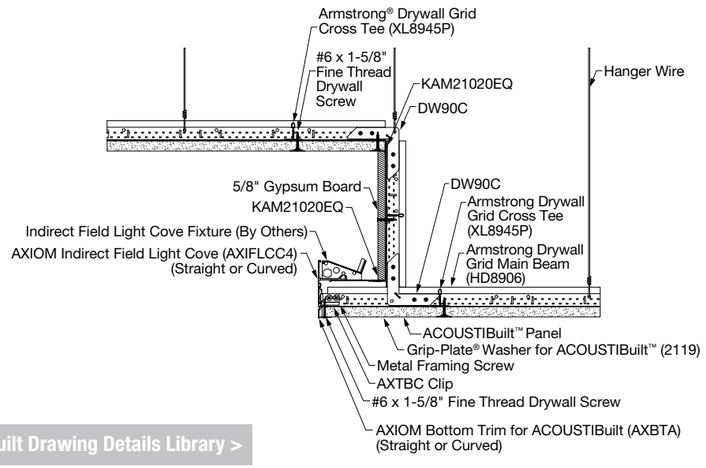

Download ACOUSTIBuilt Drawing Details Library >

Typical Details

Flush Transition – ACOUSTIBuilt™ to 5/8" Drywall

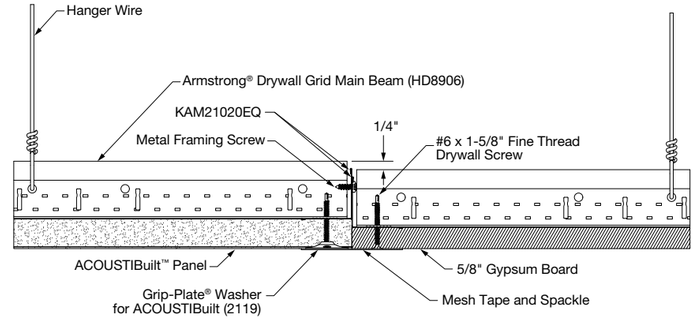

Flush Transition – ACOUSTIBuilt to 15/16" Acoustical Ceiling

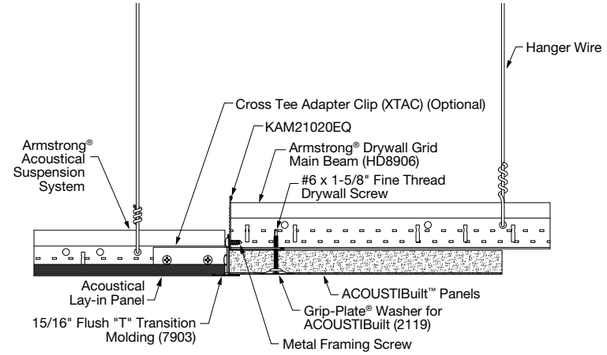

Axiom® Transition – ACOUSTIBuilt to Acoustical Ceiling

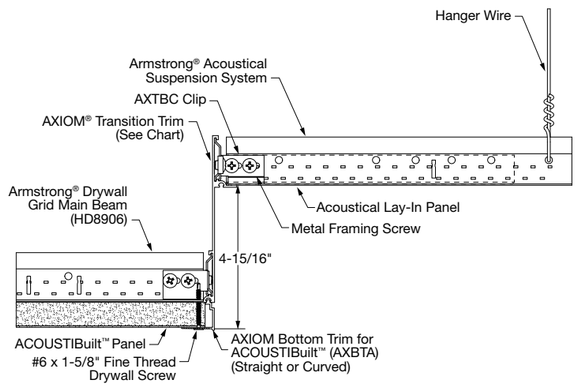

Download ACOUSTIBuilt Drawing Details Library >

ACOUSTIBUILT™

Seamless Acoustical Ceiling System
fine texture

TOTAL ACOUSTICS®
Sound Absorption (NRC) + Sound Blocking (CAC)

SUSTAIN®
High Performance Sustainable Ceiling Systems (White Only)

ACOUSTIBuilt™ Seamless Acoustical Ceiling System

plus capabilities to do more

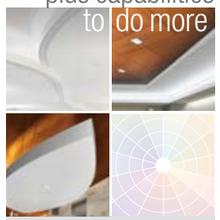

armstrongceilings.com/capabilities
See more photos at: armstrongceilings.com/photogallery

New seamless acoustical ceiling system offering monolithic visual and Total Acoustics® performance.

KEY SELECTION ATTRIBUTES

- Look of drywall in a seamless acoustical ceiling
- Get total noise control and floor plan versatility with Total Acoustics® ceiling panel options: NRC + CAC = Total Acoustics Performance™
- Finished White ACOUSTIBuilt™ is part of the Sustain® portfolio and meet the most stringent sustainability compliance standards today
- Smooth non-directional, monolithic, drywall-like visual
- Now add a hint of color, tailored to your design palette
- Quick, easy installation using Armstrong® Drywall Grid
- Install on Drywall Grid System (DGS)
  - DGS in any room, any size flat or sloped
  - ShortSpan® in corridors up to 8'6" with no wires
  - ShortSpan in rooms up to 17'0" with one StrongBack™ support in the middle
- Similar installation and finishing methods to drywall ceilings
- ACOUSTIBuilt is intended for spaces desiring a Level 4 equivalent drywall finish
- Easier to install than acoustical plaster at a lower cost
- Can be installed with most drywall compatible light fixtures including those fixtures from our partners:
  - Axis
  - XAL
  - USAI®
  - Price®

TYPICAL APPLICATIONS

- Offices
- Lobbies
- Education
- Exposed Structure
- Retail
- Hospitality
- Cloud Applications

FINE TEXTURE FINISH FOR ACOUSTIBuilt™ PANELS

White (WH)

COLOR TINTS OF YOUR CHOICE

Available in any light color tone!

NOTE: Custom color tints should have an LRV (Light Reflectance Value) of 50 or greater.

ACOUSTIBUILT™

Seamless Acoustical Ceiling System
fine texture

USDA CERTIFIED BIOBASED PRODUCT
PRODUCT 95%

Declare.

SUSTAIN® High Performance Sustainable Ceiling Systems (White Only)

GREENGUARD Gold Certified (details below)

UP TO 75% RECYCLED CONTENT

Calculate LEED contribution at armstrongceilings.com/greengenie

LEED®: energy management; construction waste mgmt; regional materials; design for flexibility; EPD; recyclable/ extended producer resp.; biobased materials; recycled content; sourcing of raw materials; material ingredient reporting; low emitting materials; lighting quality; acoustics

▲ LOCATION DEPENDENT

VISUAL SELECTION

Edge Profile	Item No.	Dimensions (Inches)
ACOUSTIBuilt™ Panel		
7/8" Tapered Edge 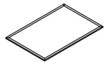	**2604**	48 x 72 x 7/8"

PERFORMANCE SELECTION

Dots represent high level of performance (•).

UL Classified Acoustics NRC	+ CAC	= Total Acoustics[1]	Fire Performance	Light Reflect	Mold & Mildew Protection (Bio-Block)	Sag Resist (Humi-Guard+)	Certified Low VOC Emissions	Durability: Wash	Durability: Scratch	Durability: Soil	Recycled Content	Recycle Program	10-Yr Warranty
0.80**	46	**BEST**	Class A	0.87*	•	•	•	–	–	–	•	–	•
•	•												

[1] Total Acoustics® ceiling panels have an ideal combination of sound absorption and sound-blocking in one product.
* White Fine-Texture Finish performance
** Per ASTM C423 & E795, E-400 Mounting

WALL-TO-WALL ASSEMBLY AND INSTALLATION OVERVIEW

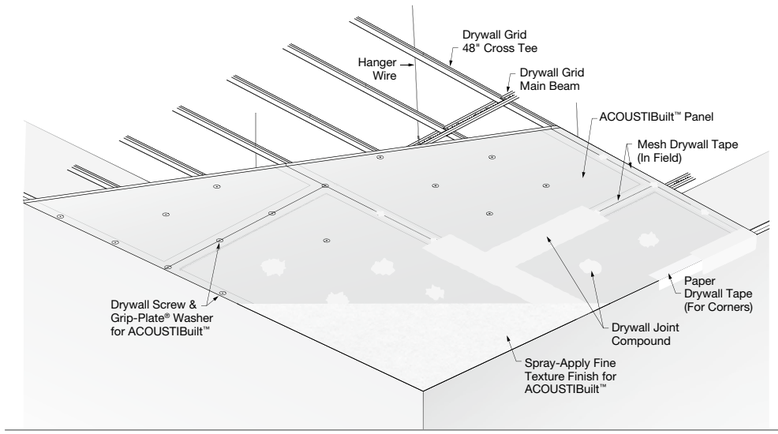

ACOUSTICAL INFORMATION

Mounting Method	Sabins/SF
Cloud	0.80
Cloud w/ infill 8200T10	1.33

PHYSICAL DATA

Material
Wet-formed mineral fiber with scrim

Fire Performance
Class A: ASTM E84 and CAN/ULC S102 surface burning characteristics. Flame Spread of 25 or less. Smoke Developed of 50 or less.

ASTM E1264 Classification
Type IV, Form 2, Pattern G
Fire Class A

Humidity/Sag Resistance
HumiGuard® Plus ceiling panels are recommended for areas subject to high humidity, up to, but not including, standing water and outdoor applications.

Mold/Mildew Protection
Panels with White Fine-Texture Finish offer BioBlock® performance and resist the growth of mold and mildew.

High Recycled Content
Contains greater than 50% total recycled content. Total recycled content based on product composition of post-consumer and pre-consumer (post-industrial) recycled content per FTC guidelines.

VOC Emissions
GREENGUARD Gold Certified
Third-party certified compliant with California Department of Public Health CDPH/EHLB/Standard Method Version 1.2, 2017. This standard is the guideline for low emissions in LEED®, WELL Building Standard™, Living Building Challenge® (LBC), CalGreen Title 24, ANSI/ASHRAE/USGBC/IES Standard 189; ANSI/GBI Green Building Assessment Protocol

PRODUCT CERTIFIED FOR LOW CHEMICAL EMISSIONS UL.COM/GG UL 2818

UL GREENGUARD GOLD

Design and Lighting Considerations
ACOUSTIBuilt™ is intended for spaces desiring a Level 4 equivalent drywall finish. Critical lighting conditions such as grazing or side light are important to consider while specifying as they can accentuate any imperfections or visible joints.

Lighting and diffuser fixtures must be able to accommodate 7/8" thick panels. Contact the lighting and diffuser manufacturers for recommended fixture use and integration. ACOUSTIBuilt™ is a non-accessible ceiling. Access panels can be integrated, as needed, following standard installation practices. Refer to access panel manufacturer to verify compatibility with 7/8" thick panels.

Acoustical Considerations
When installed as a cloud, average sound absorption is 0.80 Sabins/SF. The addition of acoustical infill panel item 8200T10 can increase sound absorption up to 1.33 Sabins/SF.

Excessive integrations and/or small enclosed spaces where the ceiling is more compound than open area will result in degradation of sound absorption. Certain lighting conditions and/or colors may require an additional coat of Fine Texture Finish, resulting in a degradation of sound absorption. ACOUSTIBuilt™ panels absorb the most sound when installed as full panels. Plan the layout to minimize panel joints and fixture integrations which cover the surface of the ceiling.

Insulation Value
R Factor – 2.2 (BTU Units)
R Factor – 0.39 (Watts Units)

10-Year Panel Warranty
Details at armstrongceilings.com/acoustibuilt

Weight; Square Feet/Carton
2604 – 1.1lbs/SF; 240 SF/ctn

Minimum Order Quantity
1 carton (10pcs)

ACOUSTIBUILT™

Seamless Acoustical Ceiling System
fine texture

USDA CERTIFIED BIOBASED PRODUCT PRODUCT 95%

Declare.

SUSTAIN• High Performance Sustainable Ceiling Systems (White Only)

GREENGUARD Gold Certified (details below)

UP TO 75% RECYCLED CONTENT

Calculate LEED contribution at armstrongceilings.com/greengenie

LEED®

energy management	construction waste mgmt	regional materials	design for flexibility	EPD	recyclable/ extended producer resp.	biobased materials	recycled content	sourcing of raw materials	material ingredient reporting	low emitting/ materials	lighting quality	acoustics
✓	✓	✓	✓	✓	●	✓	✓	✓	✓	✓	✓	✓

▲ LOCATION DEPENDENT

SUSPENSION SYSTEMS – Order Separately

Item No.	Description	Required for Install	Pcs/Ln.Ft Ctn
HD8906	12' HD Drywall Main Beam	Yes	12/144
XL8945P	4' Drywall Cross Tee	Based on layout	36/144
XL8965	6' Drywall Cross Tee	Based on layout	36/216
KAM21020	2 x 2 x 120" Knurled Angle Molding (0.033" metal thickness)	Based on layout	10/100
S7708P	8' ShortSpan Tee	–	12/96
S7710P	10' ShortSpan Tee	–	
S7712P	12' ShortSpan Tee	–	
S7714P	14' ShortSpan Tee	–	
7891	12 gauge hanger wires 144" length	–	140 pcs

PERIMETER TRIMS – Order Separately

Item No.	Description	Required for Install
AX1PC_STR **AX1PC_CUR**	Axiom® One-Piece Drywall Trim available for 4" and 6" heights – straight or curved	Based on layout
Axiom Classic: **AX_STR** **AX_CUR** **Axiom Bottom Trim:** **AXBTASTR** **AXBTACUR**	Axiom Classic Trim available in 2" to 16" heights (2" increments – straight or curved) with Axiom Bottom Trim for ACOUSTIBuilt™	Based on layout Axiom Bottom Trim is required to use Axiom Classic and select Axiom Trims with ACOUSTIBuilt
Straight: **AXAKEACBSTR** **Inside Corner:** **AXAKEACBIC** **Outside Corner:** **AXAKEACBOC**	Axiom® Angled Knife Edge® Trim for ACOUSTIBuilt – Inside or Outside Corner	Based on layout

See Axiom Data Page for clips and accessories needed to install Axiom trim shown above.

PLASTERFORM™ (GRG) ACCESS PANELS

Item No.	Description
PF-15030B	30" x 30" Rounded Corner Access Panel
PF-15024B	24" x 24" Rounded Corner Access Panel
PF-15018B	18" x 18" Rounded Corner Access Panel

See more Plasterform Access Panel options at: armstrongceilings.com/plasterform

PAINT AND WASHERS – Order Separately

Item No.	Description	Required for Install
2605WH	Fine Texture Finish for ACOUSTIBuilt Panels (available in white and custom off-white tints)	For every 10 panels (240 SF) – order 1 pail (4 gal.)
2119	Grip-Plate® Washers for ACOUSTIBuilt Panels (1-1/4" diameter)	For every 10 panels (240 SF) – order 1 bag (250 pcs)

STANDARD ACCESSORIES BY OTHERS – Order Separately

Item No.	Description	Required for Install
Screws	# 6 x 1-5/8" fine thread sharp point or self-drilling drywall screws	Yes
Setting-Type Compound	Drywall joint compound (Used for initial filling of joints and screw/washer locations)	Yes
Drying-Type Compound	Premixed ultra light weight drywall joint compound (Used for final finsihing)	Yes
Mesh Tape	Self-adhesive mesh drywall joint tape (For Field)	Yes
Paper Tape	Paper drywall tape (For Corners)	Yes

ACOUSTIBUILT™

Seamless Acoustical Ceiling System
fine texture

USDA CERTIFIED BIOBASED PRODUCT PRODUCT 95%

Declare.

SUSTAIN• High Performance Sustainable Ceiling Systems (White Only)

GREENGUARD Gold Certified (details below)

UP TO 75% RECYCLED CONTENT

Calculate LEED contribution at armstrongceilings.com/greengenie

LEED®

energy management	construction waste mgmt	regional materials	design for flexibility	EPD	recyclable/ extended producer resp.	biobased materials	recycled content	sourcing of raw materials	material ingredient reporting	low emitting/ materials	lighting quality	acoustics
✓	✓	✓	✓	✓	●	✓	✓	✓	✓	✓	✓	✓

▲ LOCATION DEPENDENT

VISUAL SELECTION

Item No.	Description	Fixture Length
Linear Light Trim Kit for ACOUSTIBuilt™		
DGSLLACBTK24	24" Linear Light Trim Kit	24" x 4"
DGSLLACBTK30	30" Linear Light Trim Kit	30" x 4"
DGSLLACBTK48	48" Linear Light Trim Kit	48" x 4"
DGSLLACBTK60	60" Linear Light Trim Kit	60" x 4"
DGSLLACBTK72	72" Linear Light Trim Kit	72" x 4"
DGSLLACBTK90	90" Linear Light Trim Kit	90" x 4"
DGSLLACBTK96	96" Linear Light Trim Kit	96" x 4"
DGSLLACBTK120	120" Linear Light Trim Kit	120" x 4"
DGSLLACBTKCON	120" Continuous Linear Light Trim Kit	120" x 4"

Linear Light Trim Kits designed to work with 7/8" thick AcoustiBuilt panels

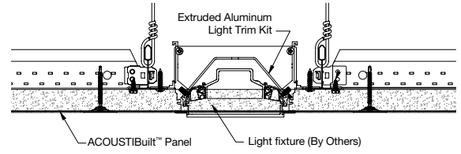

Seamless integration between ACOUSTIBuilt™ and linear lighting for consistent fit and finish.

- Leverage linear lighting in long runs to create a monolithic look
- Faster and easier to build and install compared to traditional framed linear lighting
- Light fixture installs from below ceiling to optimize ceiling heights
- Comes in pre-assembled kits
- Compatible with select Axis and XAL Lighting

For compatible lighting details visit: axislighting.com or XALusa.com

LIGHTING AND MEP INTEGRATION

Lighting and diffuser solutions are available through partner companies, or you can use standard modular and pendant fixtures.

LIGHTING PARTNERS

axis USAI Lighting XAL

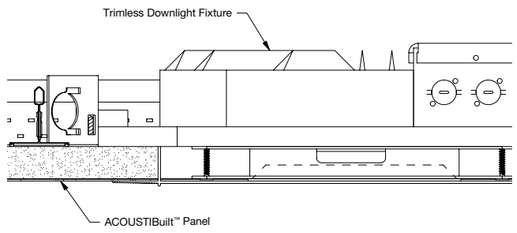

Additional options include standard industry lighting that complements the module size, or pendant fixtures that hang below the ceiling system.

For details visit:
armstrongceilings.com/partners

MEP PARTNERS

price

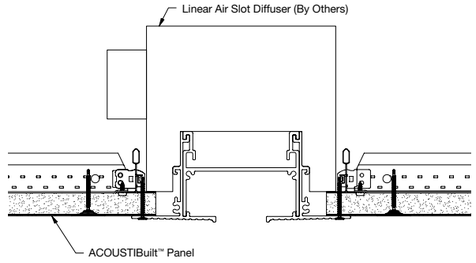

FLEXHEAD

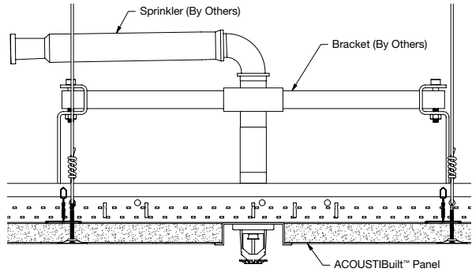

TAKE THE NEXT STEP

1 877 276 7876

Customer Service Representatives
7:45 a.m. to 5:00 p.m. EST
Monday through Friday

TechLine – Technical information, detail drawings, CAD design assistance, installation information, other technical services – 8:00 a.m. to 5:30 p.m. EST, Monday through Friday. FAX 1 800 572 8324
or email: techline@armstrongceilings.com

armstrongceilings.com/commercial

Latest product news

Standard and custom product information

Online catalog

CAD, Revit®, SketchUp® files

A Ceiling for Every Space® Visual Selection Tool

Product literature and samples – express service or regular delivery

Contacts – reps, where to buy, who will install

YOU INSPIRE™ SOLUTIONS CENTER

1 800 988 2585
email: solutionscenter@armstrongceilings.com
armstrongceilings.com/youinspire

Design Assistance

Collaborative design

Detail drawings

Specifications

Planning and budgeting

Pre-construction Assistance

Layout drawings for standard and premium products

Project installation recommendations

Contractor installation assistance

you inspire™
solutions center

helping to bring your one-of-a-kind ideas to life

Revit® Is a trademark of Autodesk, Inc.; SketchUp® is a trademark of Trimble, Inc.; LEED® is a trademark of the U.S. Green Building Council; WELL™ and WELL Building Standard™ are trademarks of International WELL Building Institute; Declare® is a trademark of, and Living Building Challenge℠ is a service mark of The International Living Future Institute; Grip-Plate® is a trademark of Rodenhouse, Inc.; UL® is a trademark of UL, LLC.; USAI® is a trademark of USAI Lighting, LLC; FlexHead® is a trademark of Anvil International; Price® is a trademark of Price Industries Limited; Axis is owned by Axis Lighting Inc.; XAL is owned by XAL, LLC; Inspiring Great Spaces® is a trademark of AFI Licensing LLC; All other trademarks used herein are the property of AWI Licensing LLC and/or its affiliates
© 2020 AWI Licensing LLC Printed in the United States of America

armstrongceilings.com/acoustibuilt

On the cover:
ACOUSTIBuilt™ Cloud installation
Vincennes University
Vincennes, IN

Inspiring Great Spaces®

Armstrong®
CEILING & WALL SOLUTIONS

BPCS-6154-820