ACOUSTIBuilt™ Seamless Acoustical Ceiling System Overview

Assembly and Installation Instructions

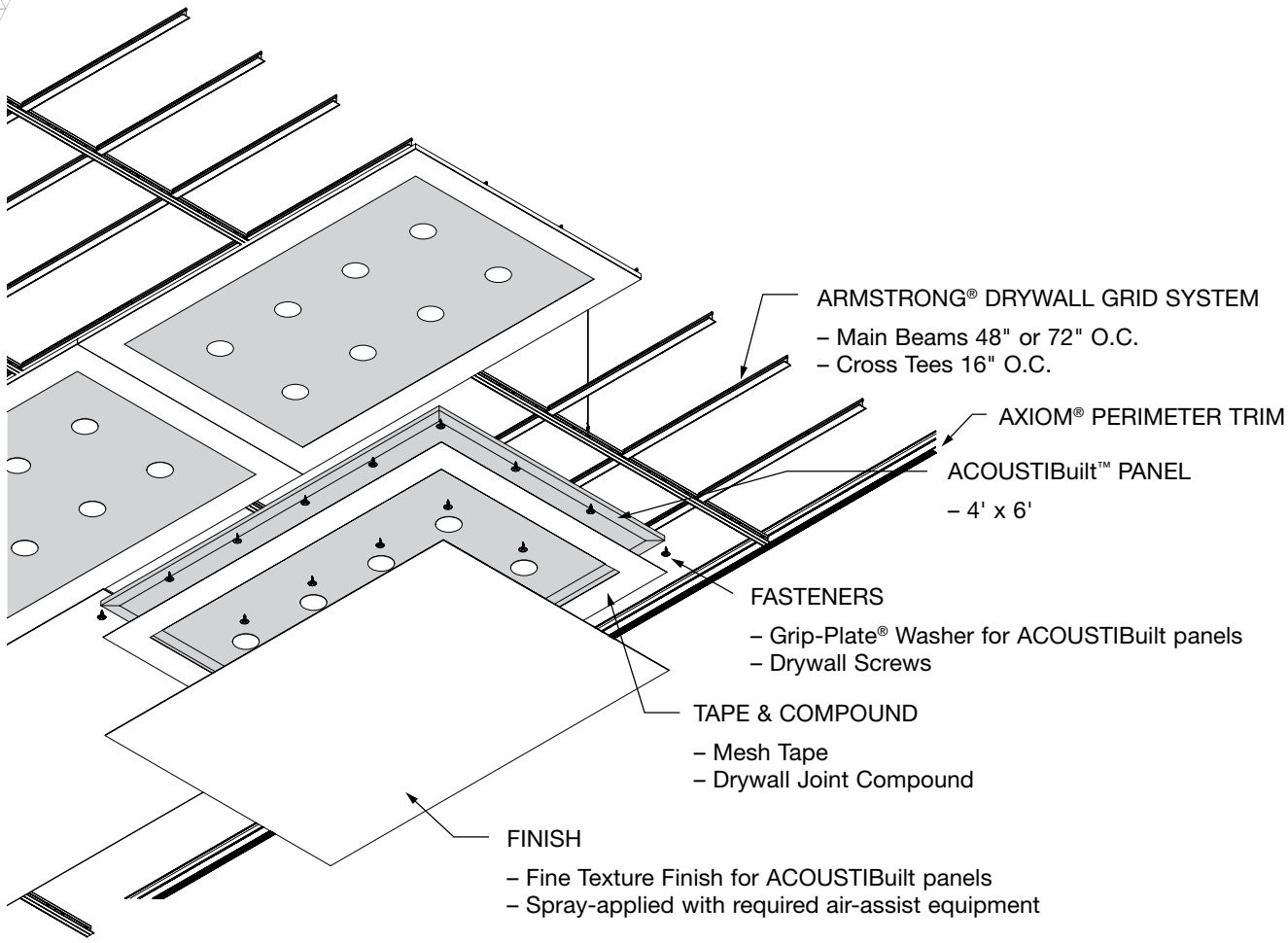

Inspiring Great Spaces®

Armstrong®
CEILING SOLUTIONS

SYSTEM COMPONENTS

Item #	Description	Ordered Separately/ Included with	Required for Install	Sold by the:	Pcs/Ctn	
SUSPENSION SYSTEM						
HD8906	12' HD Drywall Main Beam	Ordered separately	Yes	Ctn	12	
XL8945P	4' Drywall Cross Tee	Ordered separately	Based on layout	Ctn	36	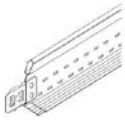
XL8965	6' Drywall Cross Tee	Ordered separately	Based on layout	Ctn	36	
7891	12 gauge hanger wire	Ordered separately (or by others)	Yes	Bundle	140	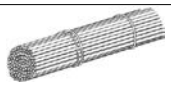
PANELS AND FASTENERS						
2604	ACOUSTIBuilt™ Panel – tapered edges, 48"x72"x 7/8"	Ordered separately	Yes	Pallet	10 Panel increments	
Screws	#6 x1-1/4" fine thread or sharp point self-drilling drywall screws	Ordered separately (by others)	Yes	Varies	Varies	
2119	Grip-Plate® Washer for ACOUSTIBuilt Panels (1-1/4" diameter)	Ordered separately	Yes	Bag	250 Washer increments	
TAPE, COMPOUND, AND FINISH						
Tape	Self-adhesive mesh drywall joint tape	Ordered separately (by others)	Yes	Varies	Varies	
Setting-Type Compound	Lightweight setting-type drywall joint compound	Ordered separately (by others)	Yes	Varies	Varies	
Drying-Type Compound	Premixed ultra light weight drywall joint compound	Ordered separately (by others)	Yes	Varies	Varies	
2605WH	Fine Texture Finish for ACOUSTIBuilt Panels – White	Ordered separately	Yes	Pail	4 gal/pail	
PERIMETER TRIMS & ACCESSORIES						
AX1PC – STR AX1PC – CUR	Axiom® One-Piece Drywall Trim Available for 4" and 6" heights – straight or curved	Ordered separately	Based on layout	Piece		
AX – STR AX – CUR	Axiom Classic Available for 2"-16" heights – straight or curved	Ordered separately	Based on layout	Piece		
AXBTASTR	Axiom Bottom Trim for ACOUSTIBuilt Straight	Ordered separately	Required for Axiom Classic	Piece		
AXBTACUR	Axiom Bottom Trim for ACOUSTIBuilt Curved	Ordered separately	Required for Axiom Classic	Piece		
KAM	Knurled angle molding for attachment to wall. 2" face recommended.	Ordered separately	Based on layout	Ctn	10	

TOOLS AND EQUIPMENT

Item #	Description	
SUSPENSION SYSTEM		
	Standard drywall grid installation tools	
PANEL INSTALLATION		
Impact or drill driver	Used to install screws with washers. A drywall screw gun with depth-sensitive nose-piece cannot be used due to interference with the washers.	
Cutting tools	Standard drywall and acoustical panel cutting tools. Utility knife, jab saw, and rotary cut-out tools are recommended	
FINISHING		
Mixer	To mix setting-type compound	
Mud Pan	Standard drywall mud pan	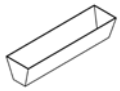
Taping knives (4", 5", 6", and 8")	Standard drywall taping knives. Used to finish board joint and fasteners, and to check flatness	
Pole Sander	For sanding compound at board joints	
Sanding Blocks	Flat, rigid sanding block to sand field fastener compound. Foam sanding block to sand compound edges.	
Examination light	To critically examine flatness	
FINE TEXTURE FINISH FOR ACOUSTIBUILT™ PANELS		
Pressure Pot	Binks® (or equivalent) pressure tank with dual air regulation and rated for 80 PSI or greater output pressure. A liner is recommended.	
Air Compressor	The spray gun requires continuous air delivery of 14.1 SCFM at 50 PSI. Air delivery can be achieved with one compressor or two in series. Consider the electrical load and circuit limit.	
Air Assist Spray Gun	Binks® Model 2100 Spray Gun: 68SS Fluid Nozzle #45-6801 68PB Air Caps #46-6032 568 Fluid Needle #47-56800 Binks® Model 95 Spray Gun: 68SS Fluid Nozzle #45-6801 68PB Air Caps #46-6032 668 Fluid Needle #47-66800 Graco® Model AirPro Conventional Spray Gun: Part #288934 Nozzle Size: 0.110" Air Cap Kit #289069 Needle/Nozzle Kit #289467	
Pole Sander	220 grit sand paper used to gently remove dust and debris as needed	
Bucket	Bucket to fill with water for soaking gun tip between coats	

Installation Video

1. GENERAL

ACOUSTIBuilt™ panels are 7/8" thick, available in a nominal size of 48" x 72", and have tapered edges on all four sides. As ordered, ACOUSTIBuilt panels are scrimmed and unfinished. Panels are installed to Armstrong® Drywall Grid using drywall screws and washers. Joints between panels are subsequently taped and the joints and fasteners are covered with compound. Finally, the surface is coated with a fine texture finish.

1.1 Safety

During the installation be certain that the work site is well ventilated, and avoid breathing dust. If high dust levels are anticipated during installation such as with the use of power tools, use appropriate NIOSH designated dust respirator. All power cutting tools must be equipped with dust collectors. Avoid contact with skin or eyes. Wear long-sleeve, loose-fitting clothes, gloves, and eye protection.

1.2 Warranty

Failure to follow the Armstrong Ceilings recommended installation instructions in effect at the time of installation will void the one-year panel warranty.

1.3 Storage and Handling

Do not store the Fine Texture Finish or panels in unconditioned spaces with temperature lower than 40° F or higher than 100° F, or with humidity lower than 25% or higher than 55% RH. Panels shall be stored in a dry interior location and shall remain in packaging prior to installation to avoid damage. Panels must not be exposed to extreme temperatures, for example, close to a heating source or near a window in direct sunlight. Proper care should be taken when handling to avoid damage or soiling.

1.4 Site Conditions

Prior to installation, the area shall be free of construction dust and debris. ACOUSTIBuilt panels should be installed in areas where the building is enclosed and the HVAC is continuously functioning. This product is not recommended for exterior applications, where standing water is present, or where moisture will come into direct contact with the ceiling. A finished ACOUSTIBuilt system features HumiGuard® Plus performance.

1.5 HVAC Design & Operation, Temperature & Humidity Control

HVAC should be designed, installed, and operated in accordance with ASHRAE Standard 62.1. It is also necessary for the area to be enclosed and for the HVAC systems to be functioning and in continuous operations for the life of the product. ACOUSTIBuilt is not intended for use where natural ventilation is part of the ventilation strategy. This product is not recommended in areas where a differential plenum pressure exists. Standard ACOUSTIBuilt ceiling systems cannot be used in exterior applications.

1.6 Fire Performance

ACOUSTIBuilt panels with Fine Texture Finish are tested to ASTM E84 and CAN/ULC S102 surface burning characteristics. Flame Spread Index 25 or less. Smoke Developed Index 50 or less (UL labeled).

1.7 Cleaning

See Section 12.

2. DESIGN AND INSTALLATION CONSIDERATIONS

2.1 Panel Layout

Panels are installed with long (6') edges parallel with the cross tees to allow for attachment at roughly 14-1/2" O.C. spacing.

Control joints are required following the standards used for gypsum board listed in ASTM C840, section 20.

- Ceilings with perimeter relief cannot exceed 50 LF and 2500 SF between control joints
- Ceiling without perimeter relief cannot exceed 30 LF and 900 SF between control joints

See section 7.2.3 for applicable details.

2.2 Directionality

Panels receive a uniform, non-directional finish.

2.3 Panel Offset/Fixture Integration

The finish face of the panels drops 7/8" below the face of the grid.

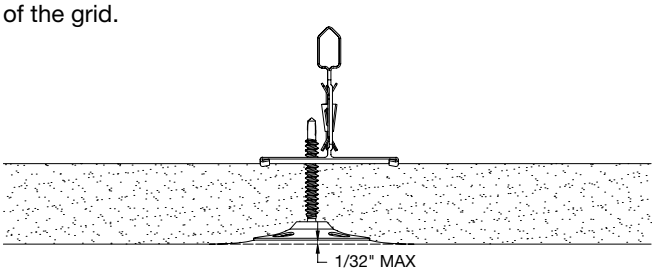

The installed height of the fixtures that interface with these panels, such as sprinkler heads and light fixture trims, must allow adjustment to accommodate this 7/8" offset.

Independent support of MEP devices is required per manufacturer instructions. ACOUSTIBuilt panels may not bear load from lights, diffusers, speakers, or similar devices.

Ensure detailed plans for integrations are established prior to panel installation.

2.4 Plenum

Panels are screw attached from below to the face of the grid and do not require space in the plenum for installation. Light fixtures and air handling systems may determine the minimum plenum height for the installation.

2.5 Sprinklers

For questions about sprinklers, see NFBA13 sprinkler code.

Designers and installers are advised to consult a fire protection engineer, NFPA 13, and local codes for guidance where automatic fire detection and suppression systems are present.

2.6 Approximate System Weight & Attachment to Deck

Overall system weight will combine the suspension system, panels, and finish components

- Drywall grid weighs approximately 0.4 lbs/SF
- ACOUSTIBuilt™ panels with Fine Texture Finish weigh approximately 1.1 lbs/SF

Fastener connections of the suspension system to building structure are specified by the contractor and must follow the manufacturer's instructions and referenced code.

2.7 Accessibility

Access panels can be integrated within the system following standard installation practices. Refer to the access panel manufacturer to verify compatibility with 7/8" thick panels and for installation details. Some access panels designed for 5/8" drywall may require a 1/4" shim to install flush with ACOUSTIBuilt panels.

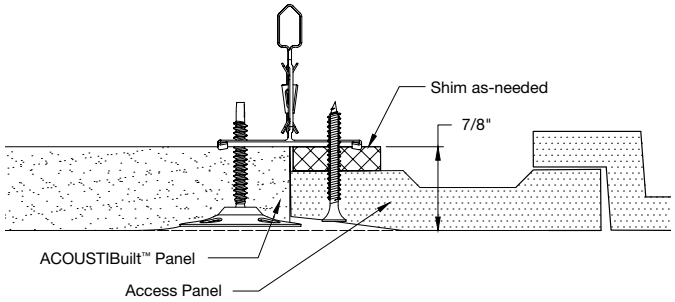

2.8 Perimeters

ACOUSTIBuilt panels can be installed to tie into walls or integrate with Axiom® perimeter trim. See sections 5 and 7.2.3 for details.

The perimeter detail may impact the need for and spacing of control joints.

2.9 Seismic Installations

ACOUSTIBuilt has been seismically tested for installation in all Seismic Design Categories. See section 9 for requirements and additional information.

3. ACCESSORIES

3.1 Panel Accessories

3.1.1 Washers

The Grip-Plate® washer for ACOUSTIBuilt panels (1-1/4" diameter) is required for panel attachment to the grid system.

3.1.2 Screws

Fine thread #6 x 1-1/4" drywall screws are required. Sharp point and self-drilling screws are both acceptable.

4. SUSPENSION SYSTEM

The requirements listed here represent the manufacturer's minimum acceptable installation recommendations, and may be subject to additional requirements established by the local authority having jurisdiction.

- All installations should be in compliance with ASTM C754, and C1858
- All references to grid component property testing are per ASTM E3090
- All grid components must meet the requirements of ASTM C645

4.1 System Components

4.1.1 Main Beams

ACOUSTIBuilt is installed on Heavy-Duty drywall main beams (HD8906/HD890610).

4.1.2. Cross Tees

4' drywall cross tees (XL8945P) or 6' drywall cross tees (XL8965) can be used.

4.1.3 Angle Molding

Perimeters of the installation that interface with walls must be supported with KAM.

4.2 Suspension/Hanger Rules

Hanger wires must be installed on the mains within 24" of the perimeter and no more than 48" O.C. along the mains.

4.3 Drywall Grid/Framing Layout

When determining the grid layout, consider the long edges of the boards must run parallel with the cross tees.

- Main beams must be installed at 48" or 72" O.C. (depending on what DGS cross tees are being used).
- Cross tees must be installed at 16" O.C.

4.4 Squaring and Leveling the Grid

This system relies on a square grid system to ensure panel edges align at centers of cross tees. If the installation does not meet these squareness requirements, the panel edges may run off of the grid system.

- The system must be square to within 1/8" over a 48" x 48" module.

To check squareness of the system, measure across the diagonals of a 48" x 48" opening. The measurements (A and B) must be equal within 1/8". See detail:

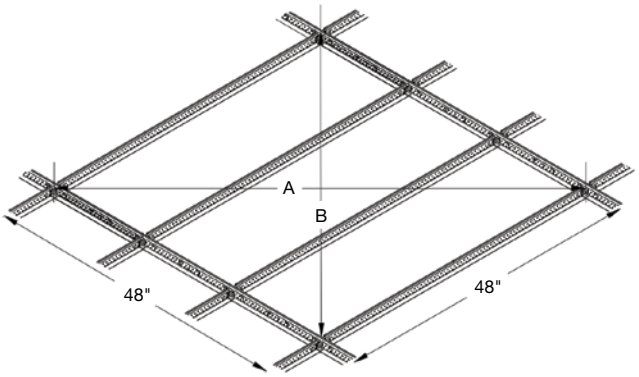

- The suspension system must be leveled to within 1/4" in 10'.

4.6 Perimeter Attachment to Wall Molding

All grid that interfaces with the perimeter must be secured to the perimeter with a framing screw.

5. FLOATING PERIMETERS / TRIM FOR DISCONTINUOUS CEILINGS

Floating perimeters must be trimmed with either Axiom® One-Piece Drywall Trim or Axiom® Classic with Bottom Trim for ACOUSTIBuilt™. Refer to the installation instructions for the Axiom product you are using for instructions specific to the trim product. The following sections address requirements in addition to the standard Axiom instructions that must be followed for integration with ACOUSTIBuilt installations.

5.1 Suspension Rules

Based on the layout, the system may require additional suspension points when compared to the Axiom trim instructions.

When Axiom trim is not idirectly supported, the following suspension rules must be followed:

- All splices (including corners) must be supported by a connecting grid member within 24" on either side of the splice. Situations where there is no grid member that interfaces the Axiom Trim within 24" of the splice will require supplemental support directly from the Axiom Trim to structure.
- Axiom must be supported by grid members no more than 72" O.C. or be directly supported from the structure.
- All grid supporting Axiom trim must have a wire at a distance no greater than half the length of the grid member, up to a max of 12" (up to 8" in seismic installations), from the Axiom Trim.
- Refer to Axiom Classic instructions for additional installation requirements for Axiom 10" tall or greater.
- Lateral bracing may be required to square the grid and stabilize the ceiling for finishing steps.

5.2 Grid Attachment

5.2.1 Axiom One-Piece Drywall Trim

- The 1/4" tabs on all Axiom T-Bar Connection Clips (AXTBC) or Axiom T-Bar Connector Twist Clips (ACCLT) must be trimmed off, typically using tin snips.

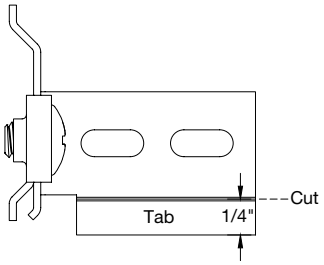

- The grid flange is registered against the bottom of the AXTBC, creating the required 7/8" to 15/16" gap between the face of the grid and the Axiom taping flange.

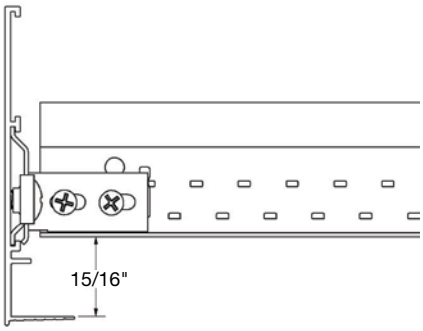

- All mains and cross tees are attached to the AXTBC clips by two metal framing screws.

5.2.2 Axiom Classic with Bottom Trim

Axiom Bottom Trim for ACOUSTIBuilt™ (AXBTA) is designed specifically for the 7/8" thickness of ACOUSTIBuilt™ panels.

- Cut off the tapered edges of panels at perimeters where Axiom Classic with Bottom Trim is used.
- AXTBC's are installed as normal, without being trimmed, so that the drywall grid rests on the Axiom Classic flange.

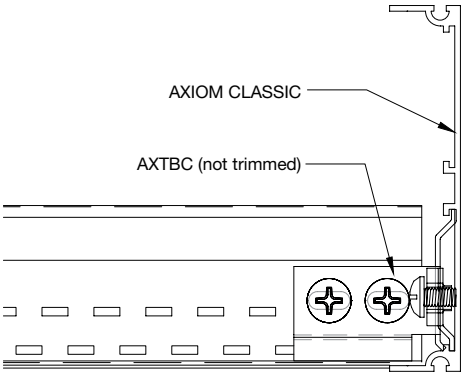

- After the panels are installed, the bottom trim is aligned in the groove of the Axiom Classic Trim and fastened with drywall screws through the taping flange of the trim into the bottom flange of the Axiom Classic trim. The bottom trim has two rows of predrilled holes. Use only the holes closest to the face to attach the bottom trim to the Axiom Classic.

- Before installing the screws, create a bevel in the AXBTA hole using a countersink tool or step bit.

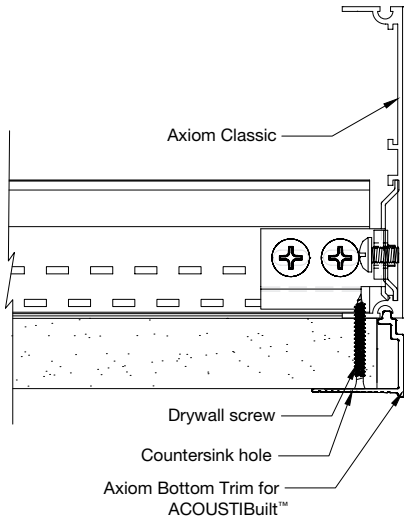

See Section 7.2.3.2 for additional details.

6. TRANSITIONS

The ACOUSTIBuilt™ Ceiling System can be transitioned on the same plane or to different elevations.

6.1 Axiom® Transitions

6.1.1 Elevation Change Transitions 2" - 10"

Axiom® Transitions Trim (items AXTR2 – AXTR10) can be used for elevation change transitions, utilizing the Axiom Bottom Trim for ACOUSTIBuilt and following the steps in section 5.2.2.

Each suspension system attaching to the Axiom Transitions should be supported to structure within 8" of the transition.

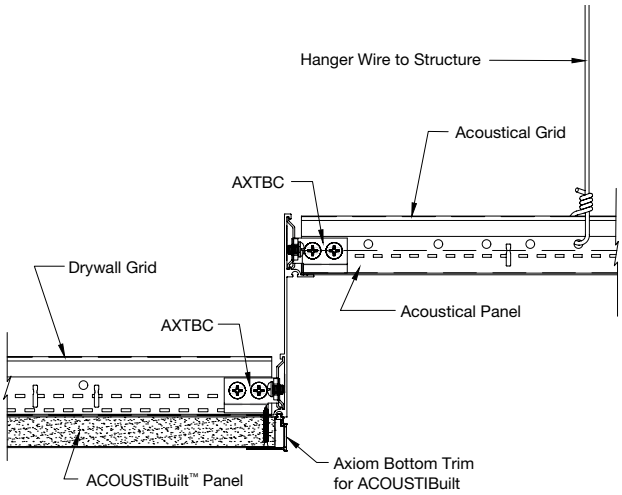

6.1.2 No Elevation Change

Axiom Transitions that have an integrated taping flange for drywall can be used with ACOUSTIBuilt™ panels by modifying the AXTBC in the same method as in section 5.2.1.

Each suspension system attaching to the Axiom transition should be supported to structure within 8" of the transition.

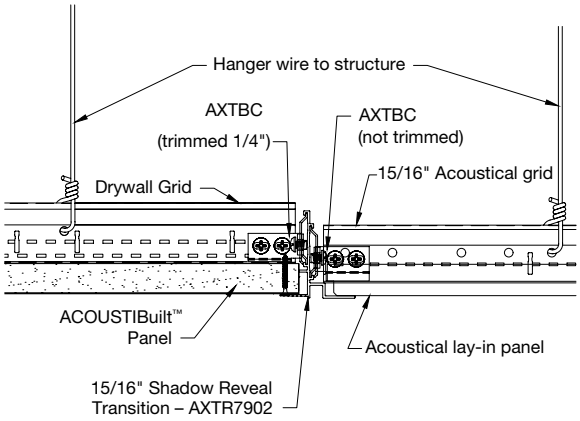

6.2 Transition Molding

Transition Molding can be used for transitions on the same plane between ACOUSTIBuilt panels and other acoustical ceiling products.

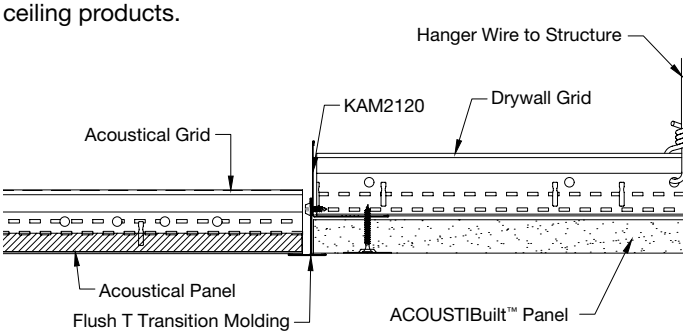

7. PANELS

ACOUSTIBuilt panels are 4' x 6' and feature a tapered perimeter around all four edges. This feature eliminates the need for butt joints. Panels can be field-cut to fit layout conditions like other acoustical panels and drywall. Field cut edges should only be placed at walls, other perimeters, or MEP. Wherever two panels are adjacent to each other, use only the factory tapered edges. Lift and handle panels carefully to avoid breaking or indenting the material that is soft compared to drywall.

7.1 Layout Rules and Overview

ACOUSTIBuilt panels require specific fastener spacing.

The panels must be oriented so the 6' edges run parallel with the cross tees, which are spaced at 16" O.C.

Screws with washers are installed approximately 14-1/2" O.C. along each row of cross tees. This will provide four rows of six fasteners supporting each panel. Eight of these fasteners will be within the field of the panel (field fasteners), and 16 will be located at the edge of the panel (edge fasteners) and shared between adjacent panels.

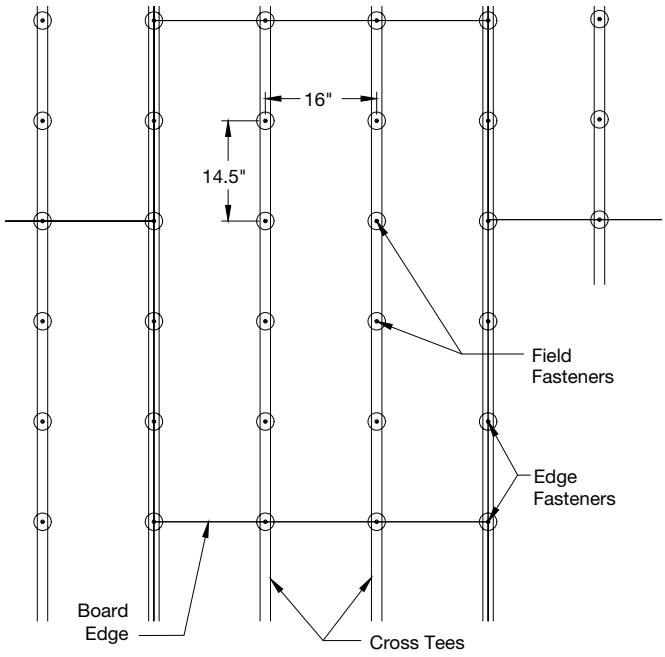

It is recommended to lightly pre-mark the screw locations on each using a carpenter pencil. Marks may not extend outside of the small fastener area where compound will be applied, as the finish coating may not hide the marks. Panels are suspended first by the eight field fasteners. Panel edges are aligned carefully with the center lines of cross tees.

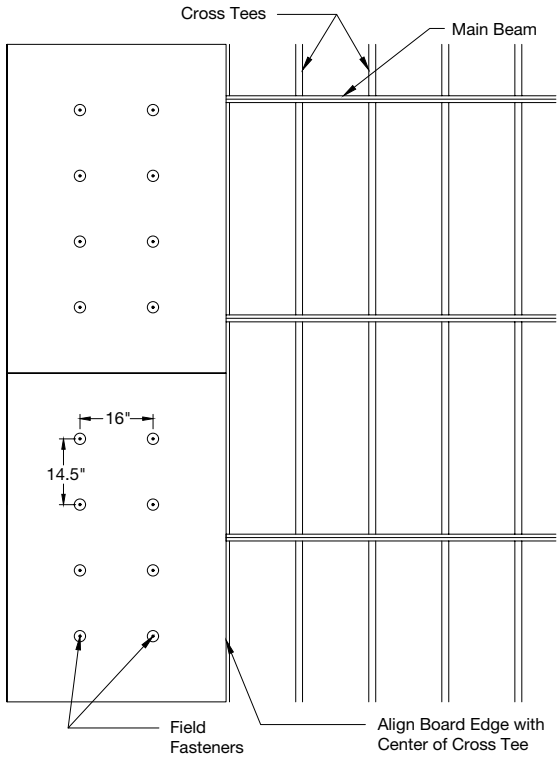

The panels should be staggered so that the short edges are offset by approximately 29" between adjacent rows. This will ensure proper spacing of edge fasteners along the perimeter of each panel.

Edge fasteners, which are shared between panels, are installed only after the adjacent board(s) are suspended.

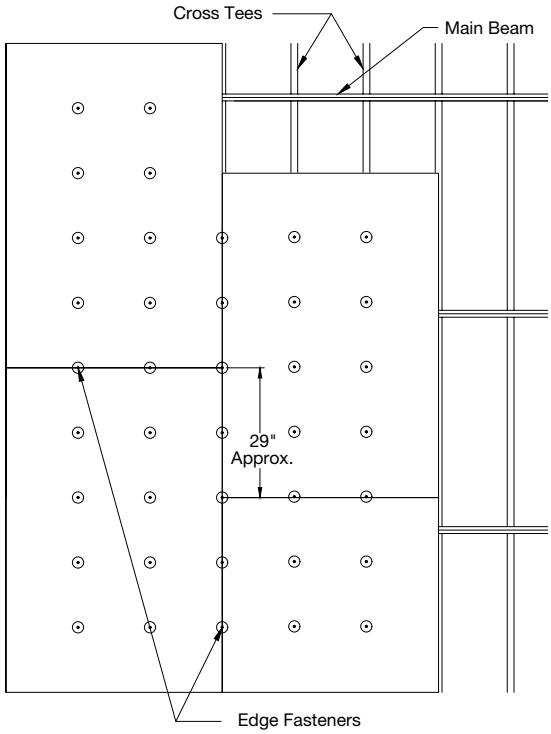

7.2 Panel Installation

7.2.1 Fastener Attachment Guidelines

All panels are attached to cross tees with the screws and washers listed in section 3.

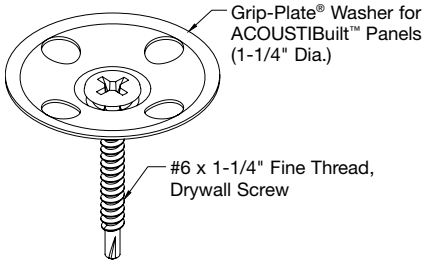

The screws and washers are installed using a standard impact driver or drill/driver. Drywall screw guns with nose cones cannot be used due to interference with the washers.

Fasteners are set to a depth of no more than 1/32" past the board surface. Depth is checked with a straight-edge to ensure each fastener is minimally recessed. Over-tightened fasteners will require additional steps to finish and compromise the final appearance.

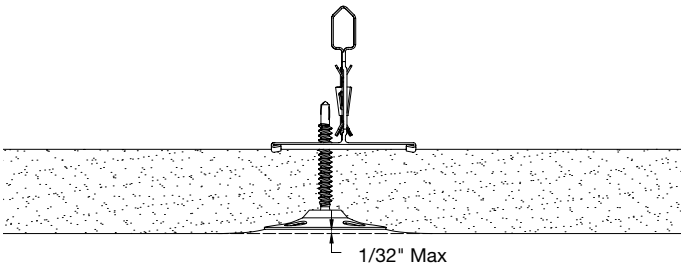

It is recommended to practice installing fasteners on scrap board to ensure proper depth is achieved.

Edge fasteners are installed to the tapered perimeter, and are not installed as deeply because the taper provides a natural recess.

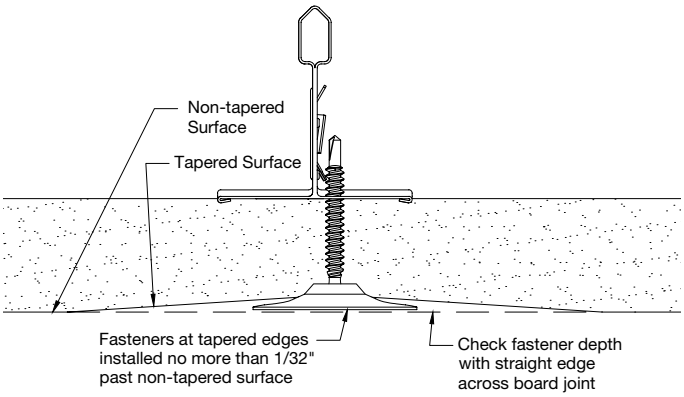

To attach taping flanges (such as L-trims, expansion beads, and fixture mud rings), screws that penetrate the flanges are installed without washers.

7.2.2 Panel Attachment

Panels should be handled by two people to avoid damaging or breaking the board edges. Board lifts may be used in a careful manner that avoids surface indentation or edge damage.

ACOUSTIBuilt™ panels are carefully lifted to the grid with the long edges aligned with the centerlines of the cross tees. The weight of the panels must be supported until all eight field fasteners are installed.

Edge fasteners are installed in the center of panel joints after adjacent panels are suspended by their eight field screws.

7.2.3 Panel Attachment at Perimeter

7.2.3.1 Panel Attachment at Wall Perimeter

When panels are cut to size to fit along a perimeter, they should be fastened to the KAM at no more than 16" O.C. along the entire cut edge.

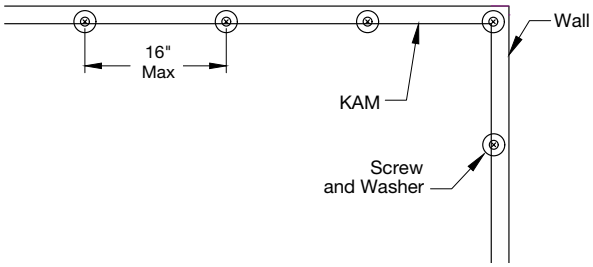

ACOUSTIBuilt panels can be finished directly to the wall.

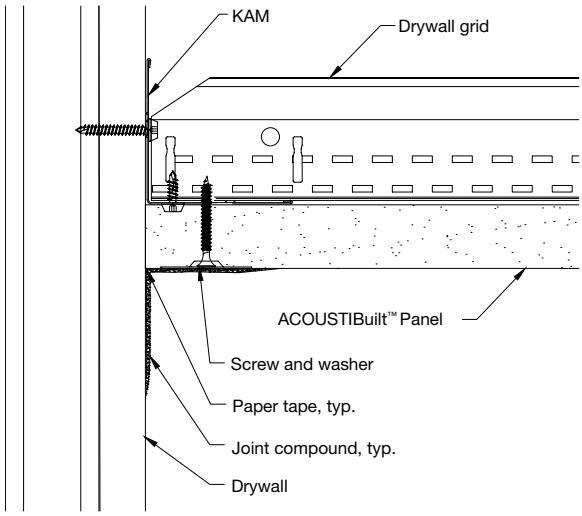

Alternatively, ACOUSTIBuilt panels can be finished to create a reveal at the wall.

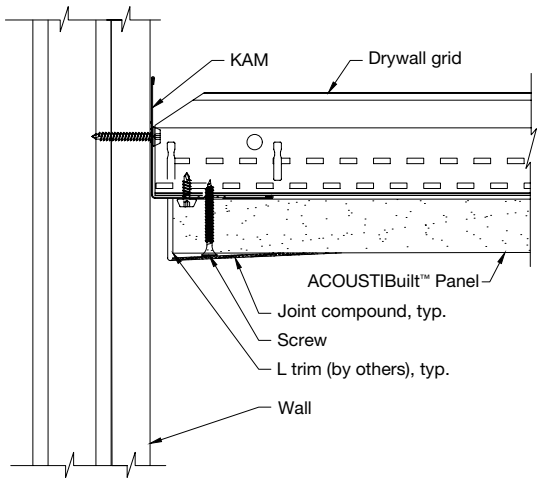

7.2.3.2 Panel Attachment at Floating Trim Perimeter

When panels are cut to size to fit within Axiom® with a taping flange (Axiom One-Piece Trim and Bottom Trim for ACOUSTIBuilt™ ceiling system), screws without washers should be inserted through the taping flange, securing the panels to cross tees at no more than 16" O.C. Additional cross tees may be required along the perimeter to meet this requirement.

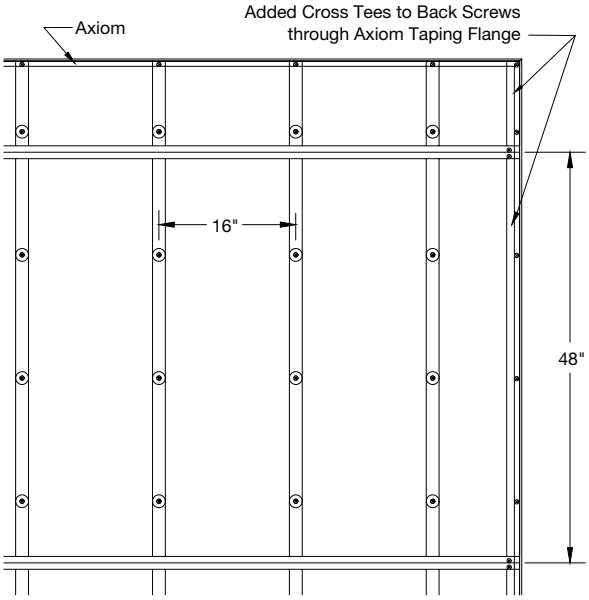

7.2.3.3 Panel Attachment at Perimeter of Cutouts

When panels are cut to accommodate fixtures, fasteners should be added to ensure the panels are fully supported. If the largest dimension of the required cutout is more than about 12", then additional cross tees should be added around the perimeter of the opening, and fasteners should be added around this perimeter at no more than 16" O.C.

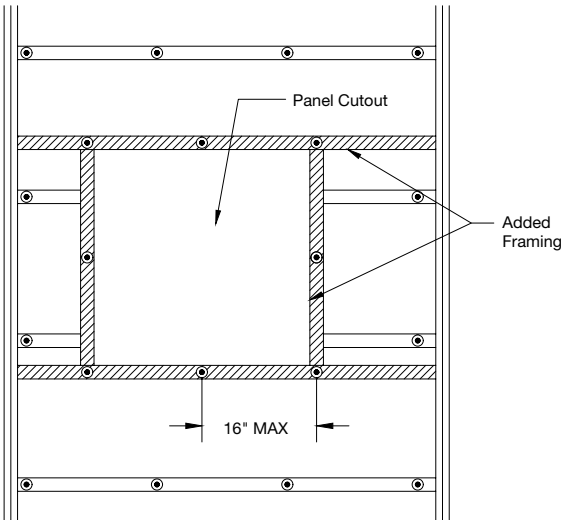

8. MEP

The installed height of the fixtures that interface with these panels, such as sprinkler heads and light fixture trims, must be able to be adjusted to accommodate the 7/8" panel thickness.

ACOUSTIBuilt panels are not intended to support any load from lights, diffusers, speakers, or similar devices. All fixtures must be supported by framing members or independently supported per the manufacturer's instructions.

9. SEISMIC

ACOUSTIBuilt ceiling system has been engineered and tested for application in all Seismic Design Categories when installed following these instructions for a wall-to-wall ceiling.

Layouts that vary from wall to wall (floating trim, clouds, elevation changes) may require rigid bracing at the discretion of the code official or project engineer.

10. FINISHING

Panel joints and fasteners are finished with tape and compound to create a flat surface. While the materials used to finish ACOUSTIBuilt panels are also used to finish drywall, the procedure has unique requirements. This section contains the required and methods to finish ACOUSTIBuilt.

10.1 Finishing Rules and Materials

Joint compound coverage shall be limited to preserve the acoustical performance of the panels. Compound at panel joints shall not exceed 8 inch widths. Compound applied to field fasteners shall not exceed 4 inch by 4 inch areas. All compound shall be smooth and free of tool marks and ridges. Panels are to be finished with taping knives. Production tools, including boxes, are not permitted.

The required materials are (1) fiberglass mesh tape, (2) lightweight setting-type joint compound, and (3) ultra lightweight drying-type joint compound. Suitable materials may be sourced from various manufacturers, provided they meet these descriptions.

Fiberglass
Mesh Tape
(by others)

Lightweight
Setting-type
Joint Compound
(by others)

Ultra Lightweight
Drying-type
Joint Compound
(by others)

TAPE AND COMPOUND PROCEDURE

Steps	Field Fasteners		Steps	Joints and Edge Fasteners	
	The following steps apply to field fasteners (i.e. fasteners that are not located at panel joints).			The following steps apply to all joints and fasteners between panels. Indentations at fasteners are spot-filled with joint compound, and joints are wiped to leave thin coatings of joint compound. Each coat extends beyond the previous, up to 8 inches on the final coat. Allow sufficient drying time between each step. Apply and wipe compound with taping knives.	
	1. Prefill fastener dimples Spot-fill fastener areas with lightweight setting-type compound			**1. Prefill fastener dimples** Spot-fill fasteners with lightweight setting-type compound.	
	2. Fill fastener dimples Fill fastener areas again, this time with ultra lightweight drying-type compound.			**2. Tape joints** Apply fiberglass mesh tape to all panel joints.	
4" x 4" max.	**3. Overfill fastener dimples** Overfill fastener areas with ultra lightweight compound to create slight mounds over the dimpled areas. Feather the compound edges into the panel facing. Overfill compound 1/32" approx.			**3. Coat joints** Apply a coat of lightweight setting-type compound to all panel joints.	
				4. Fill dimples Spot-fill shallow areas at fastener locations with lightweight setting-type compound. Use critical light to locate and fill each shallow spot.	
				5. Coat joints Coat joints again, this time with ultra lightweight drying-type compound.	
				6. Coat joints Coat joints again with ultra lightweight drying-type compound. Feather the compound edges into the panel facing to eliminate ridges and minimize required sanding. Float the joints to no more than 8 inches wide. Inspect the joints and fill any shallow spots with additional compound as-needed.	

SANDING AND INSPECTION PROCEDURE

Throughout the sanding process, inspect the surface frequently for flatness. Direct a light across the ceiling to highlight unevenness that requires attention.

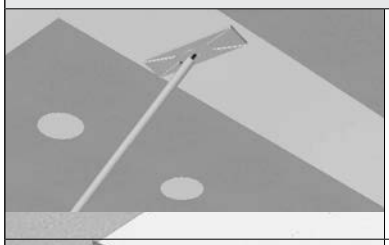	**Sand the Joints** Sand the joints with a pole sander with 180 grit or finer sand paper. Gently sand the compound edges with a rigid or foam sanding block to eliminate ridges. Use care not to damage the panel facing by over-sanding
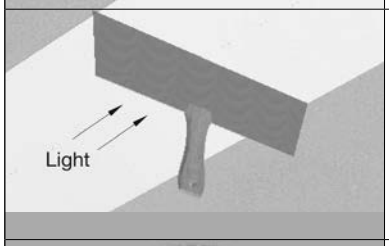	**Inspect the Joints** Inspect the joints with critical light and a straight edge tool held against the surface. Identify any unevenness indicated by light shining under the tool. Fill and sand as required.
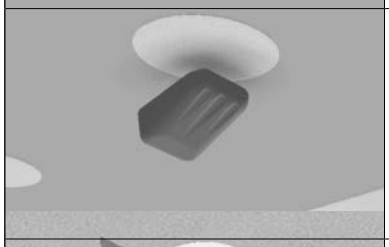	**Sand the Fasteners** Sand the overfilled compound flat. Use a rigid, flat sanding block. Do not use a soft sanding sponge. Examine frequently with critical light to ensure flatness and to avoid over-sanding. Gently sand compound edges. Use care to not damage the panel facing.
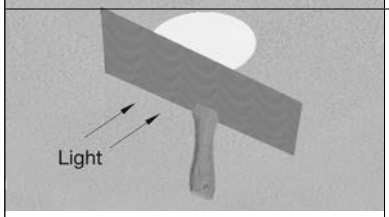	**Inspect the Fasteners** Inspect all fasteners with critical light and a straight edge tool held against the surface. Identify any unevenness indicated by light shining under the tool. Fill and sand as required.

Installation Video

11. FINE TEXTURE FINISH

11.1 Surface Preparation

Inspect the surface with critical light to ensure the surface is flat and smooth prior to applying the finish. Use a cloth to wipe off dust as needed.

11.2 Space Preparation

Ensure all service integrations are accounted for prior to applying the finish. Protect areas as required with masking film. Use drop cloth to protect the floor from dry fall.

11.3 Safety Considerations

Avoid exposure to airborne dusts/fumes/gas/mist/vapors/sprays; use only with adequate ventilation. If high dust levels are expected, use an appropriate NIOSH certified dust mask. Avoid contact with eyes and skin. Wash thoroughly after handling. See Fine Texture Finish for ACOUSTIBuilt™ label for safety information.

11.4 Spray Equipment

Fine Texture Finish ACOUSTIBuilt requires the air-assist spray equipment specified below.

Spray Gun

Binks® Model 2100 or Model 95 spray gun with required parts:

Binks Model 2100 Spray Gun

- 68SS Fluid Nozzle #45-6801
- 68PB Air Caps #46-6032
- 568 Fluid Needle #47-56800

Binks Model 95 Spray Gun

- 68SS Fluid Nozzle #45-6801
- 68PB Air Caps #46-6032
- 668 Fluid Needle #47-66800

Graco® AirPro Conventional Spray Gun:

Part #288934
Nozzle Size 0.110"

- Air Cap Kit #289069
- Needle/Nozzle Kit #289467

Pressure Tank

Binks (or equivalent) pressure tank with dual air regulation and rated for 80 PSI or greater output pressure. A liner is recommended.

Air Compressor(s)

Spray gun requires continuous air delivery of 14.1 SCFM at 50 PSI. Air delivery can be achieved with one compressor or two in series. Consider the electrical load and circuit limit.

11.5 Finish Preparation

Mix Fine Texture Finish thoroughly with a mixing paddle until a uniform consistency is achieved. Do not thin. Filter and pour the finish into the pressure tank.

11.6 Equipment Preparation

Refer to the equipment manufacturers for operational and safety information. Typical settings are shown below but may vary by equipment and conditions.

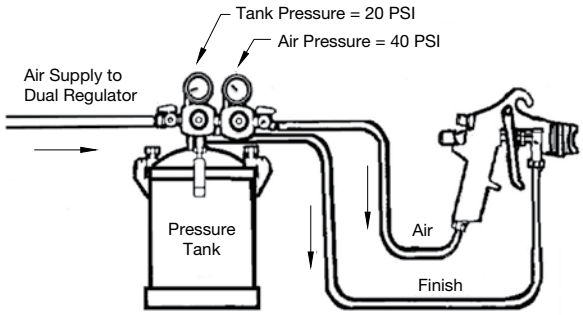

11.7 Finishing Procedure

Fine Texture Finish for ACOUSTIBuilt is applied in multiple coats, layered to achieve a uniform appearance and acoustical performance. It is strongly encouraged to practice spraying to ensure proper calibration and technique are achieved. Refer to the installation video.

11.7.1 Spray Calibration

Beginning with the pressure settings in Section 11.6, spray a dark surface such as cardboard with a single stroke. Adjust your speed and pressure settings until the spray pattern matches Image A.

IMAGE A – Spray Pattern on Cardboard

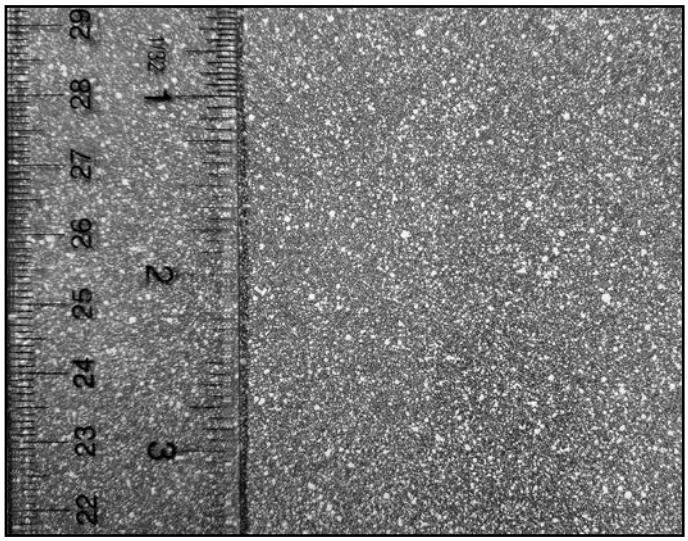

11.7.2 Spray Procedure

Apply the spray pattern of Image A to the ceiling in 4 coats with 50% overlap. Each coat is approximately 3 wet mils, or 2 dry mils. Allow at least 40 minutes for drying between coats. Allow additional dry time for humid conditions. Alternate the spray direction of each coat. For example, if the first and third coats run North/South, the second and fourth coats run East/West.

Assess the appearance after each coat with direct and side lighting. Apply each coat with proper application weight, per Images A and B. Joint compound should remain slightly visible after the third coat, but disappear after the fourth.

IMAGE B – Coats on ACOUSTIBuilt™ Panel Joint

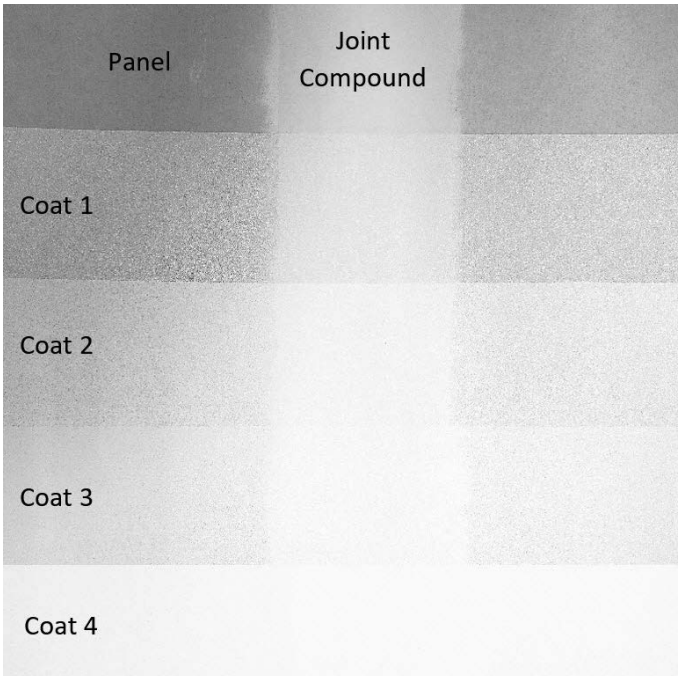

If joint compound remains visible after the fourth coat, apply a fifth coat to the transparent areas, feathering into the surrounding ceiling. Repeat as necessary, but only until the joint compound is concealed and the appearance is uniform. Applying excessive coating may degrade the acoustical performance of the system.

As necessary, use 220 grit sandpaper to gently remove dust or debris from the finish prior to the final coat.

11.7.3 Spray Technique

For general guidance, refer to the equipment manufacturer's instructions. Overlap each spray pass by 50 percent to ensure an even application. The recommended gun distance from the ceiling is 12 inches.

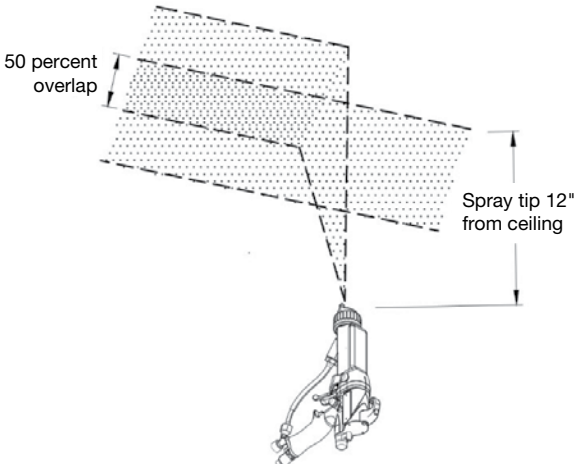

It is recommended to change stroke directions over board joints, feathering the ends of each stroke to avoid heavy streaks.

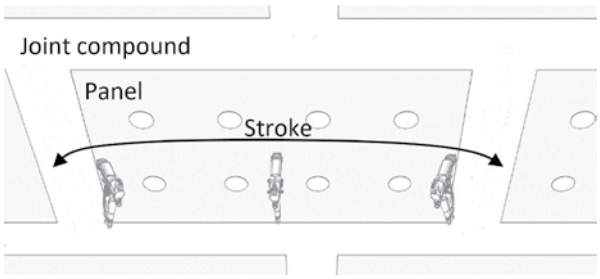

Always move the gun before pulling the trigger and continue the stroke after releasing the trigger to ensure an even application.

Refill the pressure tank between coats to avoid interrupting the spraying process. If spraying must be interrupted, stop and start spraying over joint compound at board joints.

To avoid creating glossy areas, do not spray finish on a wet surface. Ensure the previous coat has dried before spraying additional finish.

To avoid clogs, submerge the air cap and fluid nozzle in water between coats.

11.7.4 Consumption

The net consumption is 0.012 gal/ft^2, applied as four coats of 0.003 gal/ft^2. A pail contains 4 gallons of finish.

For example, a 2,500 ft^2 flat ceiling consumes net 30 gallons. Each coat consumes 7.5 gallons, or nearly two pails.

Ceiling Area	**Net Consumption** Area x 0.012	**Per Coat Consumption** Area x 0.003
200 ft^2	2.4 gal.	0.6 gal.
2,500 ft^2	30.0 gal.	7.5 gal.
5,000 ft^2	60.0 gal.	15.0 gal.

Divide large ceiling areas into smaller sections to monitor consumption rate and verify appearance (per Sections 11.7.1 and 11.7.2).

12. ACOUSTIBUILT™ MAINTENANCE AND REPAIR GUIDE

Disclaimer: Repairs may degrade sound absorption of the system.

Overview	
Cleaning	Use a vacuum cleaner with soft brush or dry soot cleaning sponge.
Surface Discoloration	Spray a light coat of Fine Texture Finish per Section 11.
Indentations and Finish Irregularities	Fill indentations with joint compound as needed and sand Finish smooth. Spray light coats of Fine Texture Finish per Section 11.
Patching	Cut out damaged area and patch the hole with drywall or ACOUSTIBuilt™ panel and joint compound. Spray light coats of Fine Texture Finish per Section 11.

12.1 Cleaning

To remove soot, dirt, and dust use a vacuum operating at low power with a soft brush or use a dry soot cleaning sponge.

12.2 Surface Discoloration

ACOUSTIBuilt™ ceilings can be refreshed by applying a new, light coat of Fine Texture Finish with required equipment per Section 12. The sound absorption of the system decreases with each additional coat.

12.3 Indentations and Finish Irregularities

To treat superficial defects such as glossy areas, indentations, and cracks, sand the local area and apply finish.

- (If applicable) Fill indentations with joint compound prior to sanding. Use ultra light weight joint compound as the top layer.
- Sand the joint compound or glossy area with 100 grit paper until the surface is smooth.
- Spray light coats of Fine Texture Finish per the Installation Instructions. Feather in the edges. Apply additional coats as needed to match the appearance and texture of the surrounding ceiling. The sound absorption of the system decreases with each additional coat.

12.4 Patching

To treat structural damage, patch the ceiling with ACOUSTIBuilt panel or drywall.

- Cut out the damaged area and cut a new patch of the same size from ACOUSTIBuilt panel or drywall.
- Sand the finish beyond the perimeter of the cut out area.
- Install framing as needed and secure the new patch with drywall screws (and Grip-Plate® washers if the new patch is cut from ACOUSTIBuilt panel). Shim the patch if needed to make it flush with the ceiling surface.
- Apply fiberglass mesh tape with setting compound around perimeter of patch. Apply compound as needed to float the new joints. Use ultra light weight compound for the top layer. Sand as needed and verify flatness.
- Apply Fine Texture Finish in 4 coats per the Installation Instructions. Apply the first two coats mostly to the patched area, and feather the additional coats into the surrounding area until uniform color and texture are achieved. The sound absorption decreases with each additional coat.

REFLECTED CEILING PLAN

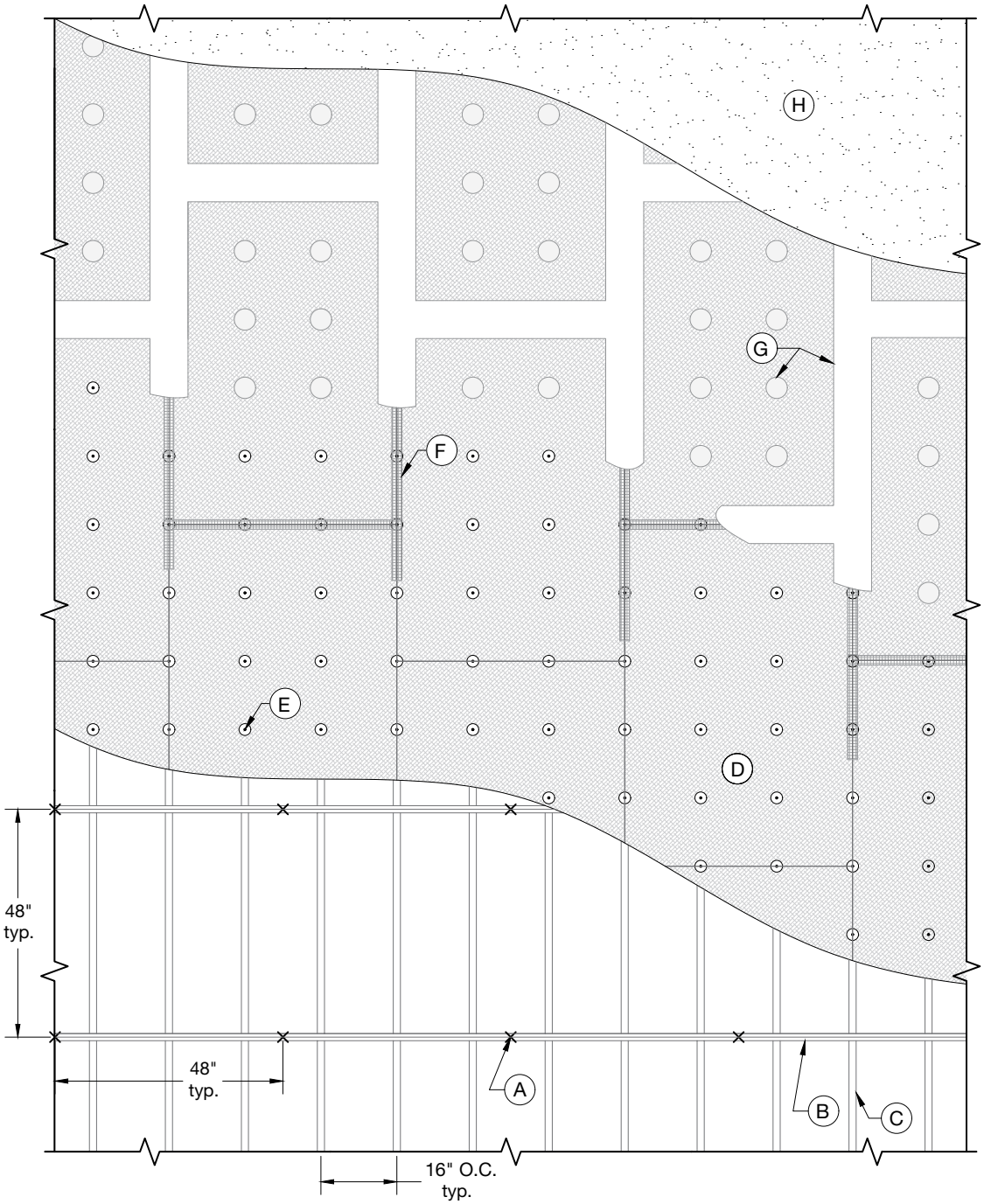

(A) × 12 gauge hanger wire

(B) main beam

(C) cross tee

(D) ACOUSTIBuilt™ Panel

(E) Grip-Plate® Washer

(F) mesh tape

(G) joint compound

(H) Fine Texture Finish for ACOUSTIBuilt™ Panels

MORE INFORMATION

For more information, or for an Armstrong Ceilings representative, call 1 877 276 7876.

For complete technical information, detail drawings, CAD design assistance, installation information, and many other technical services, call TechLine customer support at 1 877 276 7876 or FAX 1 800 572 TECH.

For the latest product selection and specification data, visit armstrongceilings.com/commercial

Armstrong® CEILING SOLUTIONS

BPLA-299099-619