METALWORKS™ Blades – Classics™

Assembly and Installation Instructions

METALWORKS™ BLADES – CLASSICS™ ITEMS				
Item #	**Item Name**	**Incl. with Blades – Classics**	**Sold by the:**	**Min. Order Qty.**
8155	22.5 x 4 x 1" with two factory installed end caps	—	Pc	20
8156	46.5 x 4 x 1" with two end caps	—	Pc	20
8157	94.5 x 4 x 1" with two end caps	—	Pc	20
7202	96 x 4 x 1" with one end cap	—	Pc	20
7203	96 x 4 x 1" with no end caps	—	Pc	20
METALWORKS BLADES – CLASSICS ACCESSORIES – suspension separate				
7300/7301	Prelude® Main Beam	No	Ctn	20
Various	Prelude® XL® Cross Tee	No	Ctn	60
730136/56418	Prelude 360° Painted Main Beam	No	Ctn	20
Various	Prelude XL 360° Painted Cross Tee	No	Ctn	60
Various	Axiom® Trim (Optional)	No	Pc	—
ACCESSORIES				
7204	Blades – Classics™ Attachment Clip	No	Ctn	100
7205	Blades – Classics Alignment Device (optional)	No	Ctn	24
8158	Blades – Classics 1" x 4" Field-Cut End Cap	No	Ctn	10

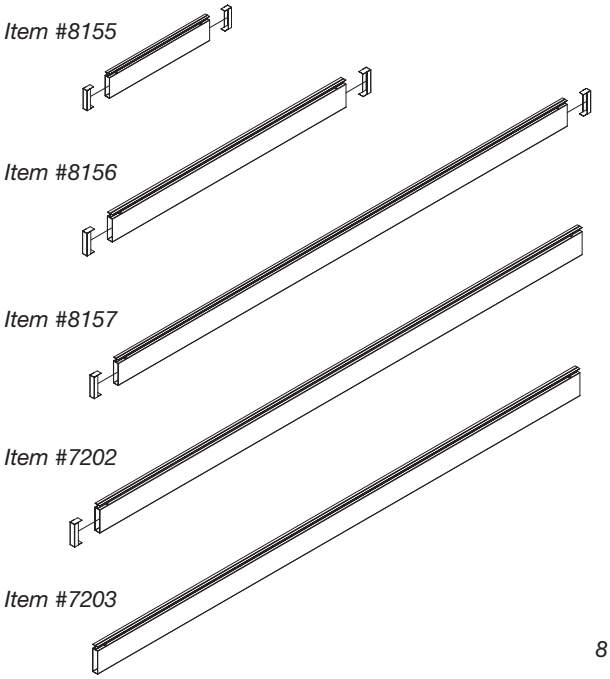

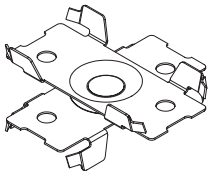

7204 Attachment Clip

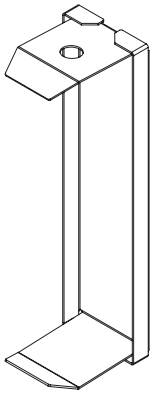

8158 Field-Cut End Cap

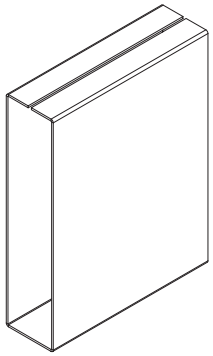

7205 Alignment Device

Inspiring Great Spaces®

Armstrong®
CEILING & WALL SOLUTIONS

1. GENERAL

1.1 Product Description

METALWORKS™ Blades – Classics™ vertical panels are made from aluminum, designed to be suspended from a Prelude® XL® or Prelude 360° Painted 15/16" suspension system. METALWORKS Blades – Classics are available in five configurations to provide design flexibility for discontinuous or continuous ceiling systems: 22.5 x 4 x 1" with two end caps, 46.5 x 4 x 1" with two end caps, 94.5 x 4 x 1" with two end caps, 96 x 4 x 1" with one end cap, and 96 x 4 x 1" with no end caps (end caps are factory installed and fixed in place). Alignment devices are available so multiple vertical panels made from aluminum can be joined together. Panels can be cut in the field to allow for design freedom. For safety and aesthetic reasons, the field-cut end of the panel must be covered utilizing field cut end cap, item #8158. To minimize labor, custom length blades can be ordered with factory-applied end caps – contact ASQuote for information. Blades – Classics panels are made of 0.032" aluminum with factory-applied polyester paint available in White, Silver Grey, Gun Metal Grey, Effects™ Wood Looks finishes, and a wide range of custom colors. Round diagonal perforated options with a plain border, acoustical fleece backing, and acoustical infill are available. The vertical panels are installed using METALWORKS Blades – Classics Attachment Clip (available in either Stainless Steel or Black Oxide) and a Prelude Grid System with Prelude XL cross tees or RAL® 360 grid.

For Seismic installations refer to section 9.

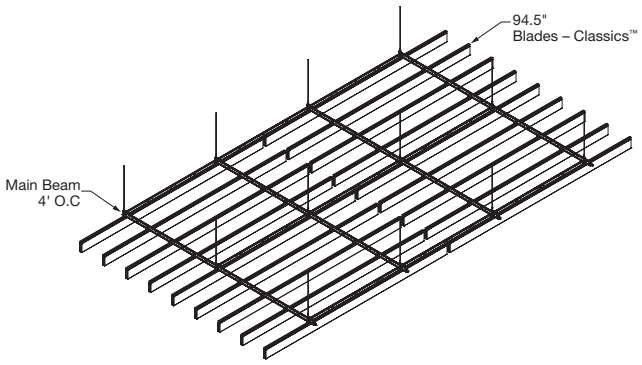

1.2 Storage and Handling

METALWORKS Blades – Classics should be stored in a dry interior location and shall remain in their original crate prior to installation to avoid damage. When removed for install, the vertical panels should be stored in a flat, horizontal position. Proper care should be taken when handling the vertical panels to avoid damage and soiling.

NOTE: METALWORKS Blades – Classics are wrapped with a plastic protective bag that is to remain on the product until installation.

1.3 Site Conditions

Areas to receive ceilings shall be free of construction dust and debris. Vertical panels should only be installed in closed and acclimatized buildings. This product is not intended for exterior purposes. Interior systems cannot be used where standing water is present or where moisture will come in direct contact with the ceiling.

1.4 METALWORKS Blades – Classics Layout

METALWORKS Blades – Classics panels are available in a variety of lengths and able to be attached to either main beams or cross tees. Each vertical panel must be supported by two attachment clips. Specific spacing guidelines are spelled out in section 7: Blades – Classics. Products with end caps create a clean visual with a edge-to-edge minimum gap of 1/4". Blades – Classics without end caps are designed to create a wall-to-wall visual with no gaps using the Alignment Device. **NOTE:** the Alignment Device will limit accessibility of the panels.

Based on four standard grid layouts, many METALWORKS Blades – Classics designs can be accomplished. Additional design options are available in the Design Appendix.

1.5 Fire Performance

METALWORKS Blades – Classics panels may obstruct or skew the existing or planned fire sprinkler water distribution pattern, or possibly delay the activation of the fire sprinkler or fire detection system. Designers and installers are advised to consult a fire protection engineer, NFPA 13, and their local codes for guidance on the proper installation techniques where fire detection or suppression systems are present.

1.6 Safety Considerations

Product arrives in a crate; make arrangements for safe handling. METALWORKS Blades – Classics greater than 94" require two people to align and install each vertical panel safely.

Edges of metal parts can be sharp. Handle metal carefully to avoid injury. Always wear safety glasses and cut-resistant gloves when handling or cutting metal.

When cutting blades, exposed raw edges of metal can be a safety hazard. The 8158 end cap is designed to give a finished edge appearance, however deburring/sanding might be required based on the quality of the cut for proper fit. Cutting tools should be appropriate for aluminum. See specific guidance in section 7.6. Improper cutting equipment could damage or dent the metal panels and cause rivets to fail.

1.7 Warranty

The METALWORKS Blades – Classics system has been tested based on the installation method described in this document. Warranty will be voided if you do not follow instructions and guidelines.

1.8 HVAC Design and Operation and Temperature and Humidity Control

Proper design for both supply air and return air, maintenance of the HVAC filters, and building interior space are essential to minimize soiling. Before starting the HVAC system, make sure supply air is properly filtered and the building interior is free of construction dust. Interior systems cannot be used where standing water is present or where moisture will come in direct contact with the ceiling.

1.9 Plenum

Since METALWORKS Blades – Classics panels are installed from below, they require minimal clearance above the suspension system. The panels never need to travel into the plenum space during installation or removal.

1.10 Cleaning

An abrasive or strong chemical detergent should not be used. A mild detergent diluted in warm water, applied with a soft cloth, rinsed, and wiped off with a chamois will maintain the panels in good condition. Oily or stubborn stains, if not removed by washing, can be wiped with products like Fantastik®, but care is necessary to avoid affecting the gloss level of the paint finish.

2. DESIGN AND INSTALLATION CONSIDERATIONS

2.1 Directionality

In prior installation instructions, METALWORKS™ Blades – Classics™ panels had to run perpendicular to the mains. Now, when installing with 360° Painted Grid, or Prelude® grid, Blades – Classics can run in any direction, including parallel, perpendicular, or on any angle from the mains.

2.2 Sprinklers

METALWORKS Blades – Classics may obstruct or skew the existing or planned fire sprinkler water distribution pattern, or possibly delay the activation of the fire sprinkler or fire detection system. Designers and installers are advised to consult a fire protection engineer, NFPA 13, and their local codes for guidance on the proper installation techniques where fire detection or suppression systems are present.

Blades – Classics hang **4-7/8"** below the face of the grid. Sprinkler heads may need to clear bottom of panels depending on the openness of the layout. See local building code official or fire protection engineer.

2.3 Plenum

Since METALWORKS Blades – Classics are installed from below, they require minimal clearance above the suspension system. Blades – Classics never need to travel into the plenum space during installation or removal.

2.4 Approximate System Weight (lbs/SF) and Attachment to Deck

Overall system weight will be based on the Blades – Classics panels and grid layout:

- METALWORKS Blades – Classics weigh 0.6 lbs/LF Based on your layout, you will need to calculate lbs/SF based on the LF weight.
- The weight of the suspension system ranges between 0.2 – 0.3 lbs/SF based on the grid layout and components used.
- If the Blades – Classics panels are being installed in conjunction with mineral fiber/fiberglass acoustical panels then the weight of the panels must also be considered for total system weight.

Hanger connections to structure must follow the manufacturer's instructions and referenced code. Average system weight per square foot will depend on design layout.

2.5 Accessibility

All Blades – Classics panels with factory-installed end caps can be easily removed for access.

Blades – Classics without factory end caps (item #7203) that use the Alignment Device and are installed with no end-to-end reveal are not independently accessible. To create access areas, install Blades – Classics with factory end caps. This will allow the Blades – Classics panels to be removed independently. This will require a combination of item #7202 (one end cap) to end a continuous row before the access area and a panel such as item #8157 (two end caps) to be accessible.

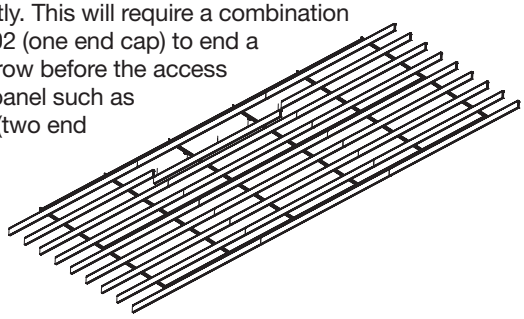

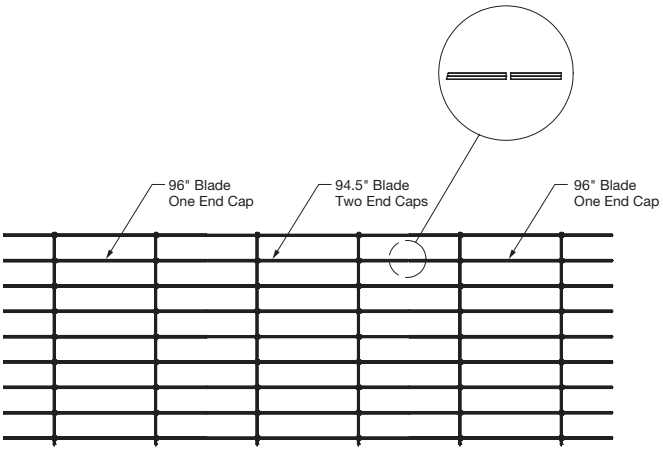

2.6 Cutting

Installations can be accomplished with full-size panels utilizing factory-applied end caps or with field-cut panels using the 8158 end caps. To ensure safety and aesthetics of the ceiling system, cut Blades – Classics panels cannot be left exposed and must be used in conjunction with the field-cut end cap. Field end cap will only be effective on 90-degree straight cuts. They will not fit on mitered/angled cuts.

3. ACCESSORIES

For a floating ceiling design aesthetic, black 360° Painted Grid is the recommended suspension system to visually disappear into a black plenum. Utilize black oxide METALWORKS Blades – Classics attachment clips. Stainless Steel attachment clips are also available. See Blades – Classics installation section 7.2 for clip-spacing guidance. A continuous wall-to-wall installation is possible with items 7202, 7203, and 7205 used along with the Blades – Classics Alignment Device.

Panel, Attachment Clip, and Grid

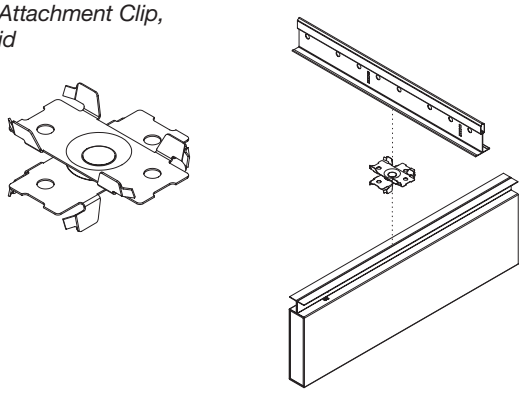

Alignment Device Details

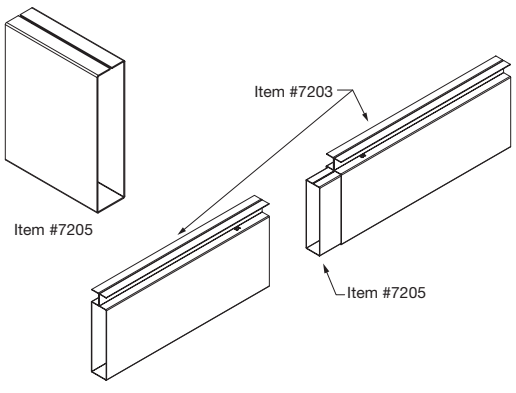

Field-Cut End Cap Details

The Field-Cut End Cap is available in finishes to coordinate with the METALWORKS™ Blades – Classics™ three standard finishes, METALWORKS Effects finishes, or in custom colors. The vertical sides of end cap when installed covers the unfinished edges and mimics the 1/4" perforation border of the METALWORKS Blades – Classics vertical panels.

Inserting Field-Cut End Cap onto Blades – Classics panel

Blades – Classics panel with Field-Cut End Cap inserted

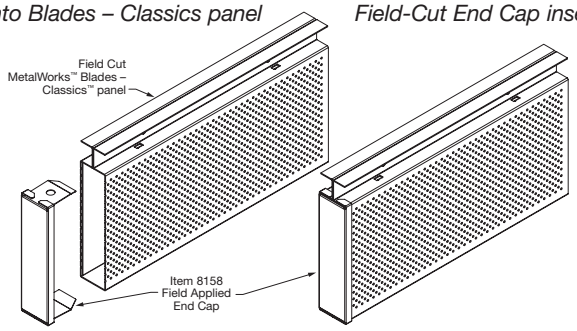

NOTE: The Field-Cut End Cap is a friction fit part and will not require glue, rivets, or other fasteners. If either arm of the clip becomes deformed, gently bend to the original pictured shape to ensure friction fit.

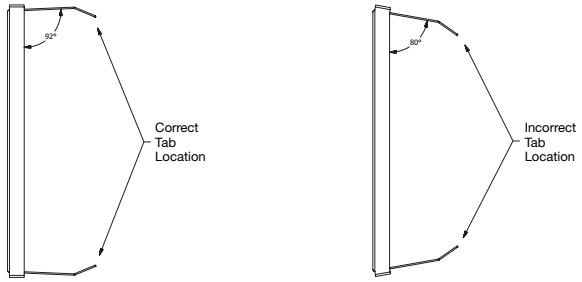

4. SUSPENSION SYSTEM (WALL-TO-WALL)

The requirements listed here represent the manufacturer's minimum acceptable installation recommendations, and may be subject to additional requirements established by the local authority having jurisdiction.

- All installations should follow ASTM C636.
- All references to suspension component duty ratings are per ASTM C636.

4.1 System components:

To create any of the METALWORKS Blades – Classics layouts shown in these instructions, Blades – Classics panels can be installed on Intermediate-Duty or Prelude® Heavy-Duty 15/16" suspension systems.

Cross tees must have XL® end details and be at least Intermediate-Duty Equivalent (12 lbs/LF)

New installations that will include mineral fiber or fiberglass acoustical panels in addition to Blades – Classics may require Heavy-Duty main beams and Heavy-Duty Equivalent (HDE) cross tees. This is based on the total system weight and the grid layout (e.g. 1' x 4' vs 4' x 4'). This will allow for attachment to main beams and cross tees.

For alternative layouts calculate the carrying capacity requirements based on the total system weight to determine if a Heavy-Duty grid system is needed.

Preferred Design Option: Install with Prelude 360º Painted main beams (730136) and 360º Painted cross tees (XL734036) to minimize grid visibility.

Using Existing Grid: Blades – Classics panels can be installed on an existing grid system. This includes systems with mineral fiber and fiberglass acoustical panels in place as long as the following conditions are met:

- Grid must be installed per ASTM C636
- Grid must be 15/16" Prelude
- Grid must meet the proper load classification to carry the Blades – Classics (0.5 lbs/LF) and any mineral fiber or fiberglass acoustical panels (if applicable).
- All Attachment Clips must engage main beams only to ensure that the grid carrying the Blades – Classics meets the load carrying requirements. This will allow for Heavy-Duty or Intermediate-Duty main beams to be used.
- Specific instructions regarding placement of Attachment Clips along the panels are noted in section 7: Blades – Classic

4.2 Suspension Rules for All Layouts

Main beams must be installed within 24" of the perimeter and then at 48" O.C. (On Center)

Hanger wires must be installed within 24" of the perimeter and no more than 48" O.C.

The ARBRKT or Rigid Attachment Clip (6459BL, available in black) can be substituted for hanger wires in up tight to deck installations and must follow the same rules for spacing.

4.3 Layouts

There are four different grid layouts that can be used to support an assortment of visuals for METALWORKS Blades – Classics. Because each Blades – Classics panel requires two clip attachments to the grid, these various layouts will provide different clip location options while minimizing the visibility of the suspension system.

1' x 4' Layout

Main beams installed at 48" O.C., with 4' cross tees perpendicular to the main beams at 12" O.C.

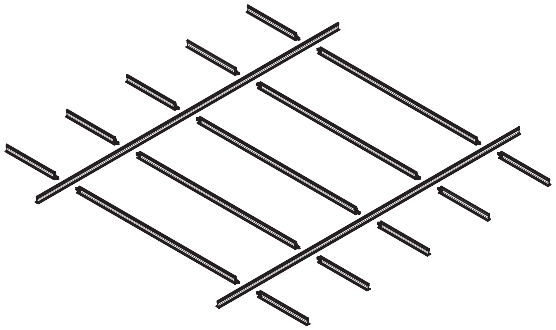

2' x 2' Layout
Main beams installed at 48" O.C., with 4' cross tees perpendicular to the main beams at 2' O.C., and 2' cross tees spanning the midpoints of the 4' cross tees.

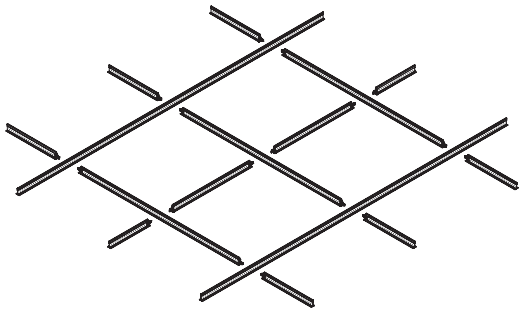

2' x 4' Layout ("H", bridged)
4' cross tees must match main beams in load-carrying capacity (Exception for 360 Painted Grid which has Intermediate-Duty Equivalent 4' cross tees (XL734036) and will not be installed with additional acoustical panels).

Main beams installed at 4' O.C., with 4' cross tees perpendicular to the main beams at 48" O.C., and 4' cross tees spanning the midpoints of the 4' cross tees.

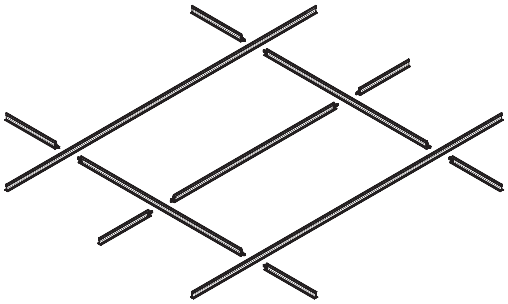

4' x 4' Layout
4' cross tees must match main beams in load-carrying capacity (Exception for 360 Painted Grid which has Intermediate-Duty Equivalent 4' cross tees (XL734036) and will not be installed with additional acoustical panels).

Main beams installed at 48" O.C., with 4' cross tees perpendicular to the main beams at 48" O.C.

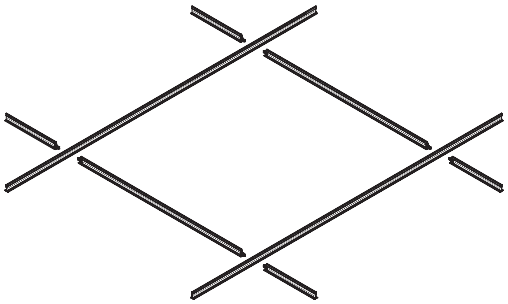

Wall-to-Wall Perimeter options
There are no special requirements for wall molding type or installation method.

5. FLOATING PERIMETER/ TRIM FOR DISCONTINUOUS SYSTEMS

METALWORKS™ Blades – Classics™ panels hang 4-7/8" below the face of the grid system. For discontinuous grid installations Axiom® trim can be used to provide a professional, finished aesthetic. For panels with an Effects™ Wood Looks finish, Effects trim is also available. Refer to the product specific Axiom installation instructions for guidance on integrating Axiom products.

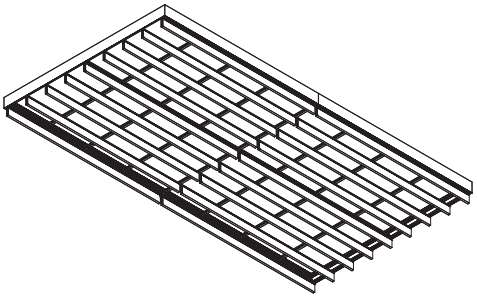

6. TRANSITIONS

METALWORKS Blades – Classics can be installed adjacent to other ceiling types or in conjunction with other ceilings. Transitions to a vertical panel installation can be made similarly to any acoustical grid ceiling. The 4-7/8" offset of the bottom of the panel to the grid face should be taken into consideration.

7. BLADES – CLASSICS

7.1 Edge Detail/Interface

7.1.1 METALWORKS Blades – Classics Attachment Clip
METALWORKS Blades – Classics panels are attached to 15/16" Prelude® or 360º Painted Grid using METALWORKS Blades – Classics Attachment Clips. Safety gloves are recommended when handling the clips. Each panel requires two Attachment Clips (Item #7204) for installation. Without the use of tools, snap each clip to the upper flange of the Blades – Classics panel by hand, making sure that all four corner tabs of the clip securely snap into place over the flange.

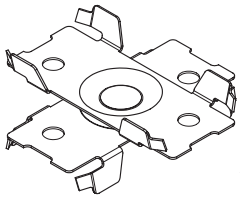

Attachment Clip

The top of each Attachment Clip can rotate to align with the grid and is then snapped onto the flange of the main beams or cross tees*. Make sure that all four corner tabs of the clip securely snap into place over the grid flange.

* For installations using existing grid, all connections must be made to Prelude main beams

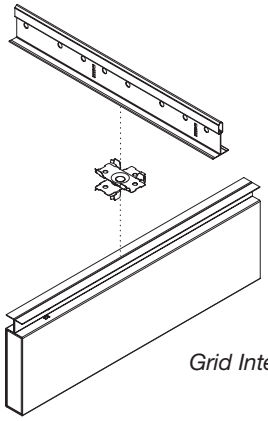

Grid Interface

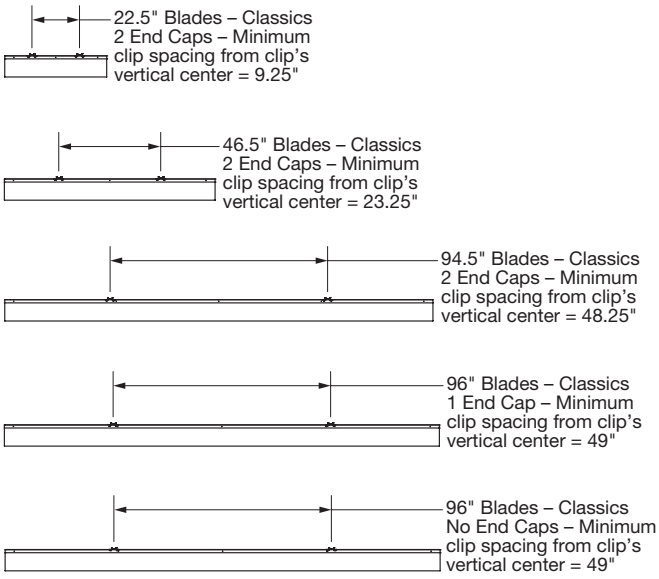

7.2 Clip Guidelines

Clips can be rotated in any orientation.

Clips can be placed anywhere along the length of the Blades – Classics™ panel as long as they follow the spacing guidelines listed below:

1) Both clips should never be installed on the same side of the Blades – Classics panel as defined by the panel's vertical center.
2) Clips should be positioned so that their center point is a minimum of 4" from the edge of the panel and a minimum of 2" from the panel's vertical center. Any clips installed less than 4" from the edge of the panel to the center of the clip must have a screw inserted through the pilot hole into the panel flange (as per the seismic instructions detailed in Section 9).

NOTE: Seismic installations will require additional screws through the clips into the grid and through the clips into the panel, regardless of where the clips are positioned on the panel.

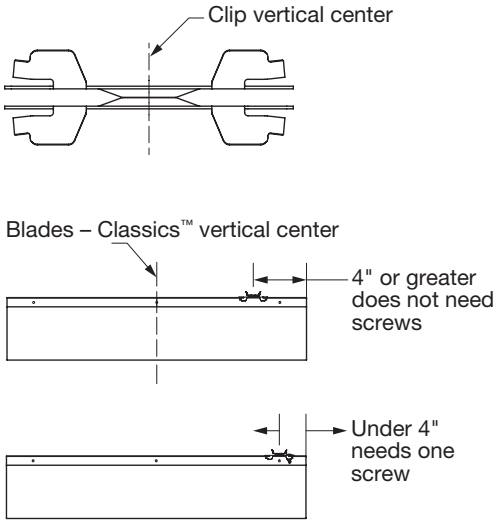

7.3 Minimum Blades – Classics Panel-to-panel/ Clip-to-clip Spacing

Due to the clip's overall size, the minimum spacing between two Blades – Classics panels is approximately 1-3/16".

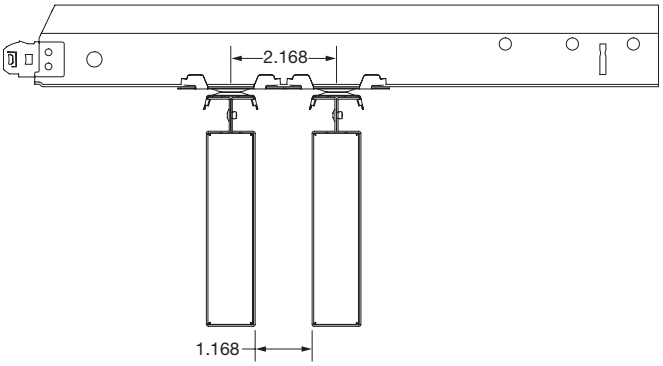

7.4 Installing METALWORKS™ Blades – Classics™ panels on Grid with Existing Acoustical Ceiling Panels Installed (square lay-in panels only)

- MetalWorks Blades – Classics can only be installed in conjunction with square lay-in panels. Panels that drop below the grid face will interfere with the Attachment Clips.
- See section 4: Suspension System for guidance on installations with Blades – Classics vertical panels and acoustical ceiling panels.
- Align the top half of the Attachment Clip with the grid and then snap it onto the flange of the grid. Make sure that all four corner tabs of the clip securely snap into place over the grid flange.
- While holding the clip against the grid face, press down on the acoustical panel to ensure that it is level and flush with the flange of the grid. NOTE: the clip will pierce the face of the acoustical panel. Facial marring will be hidden by the clip once Blades – Classics are installed.
- Press each blade up into the Attachment Clips, making sure that all four corner tabs of the clip securely snap into place over the METALWORKS Blades – Classics flange.

7.5 Continuous Runs of METALWORKS Blades – Classics (connected end to end)

For runs of multiple Blades – Classics panels connected end to end, select panels with factory-installed end caps on one end (item #7202) for the first and last panel in the row. Select panels without end caps (item #7203) to be installed in the interior of the row. Open ends of Blades – Classics are connected using the METALWORKS Alignment Device (item #7205). The Alignment Device is inserted into the open end of the installed metal panel and pushed against a factory stop (see below).

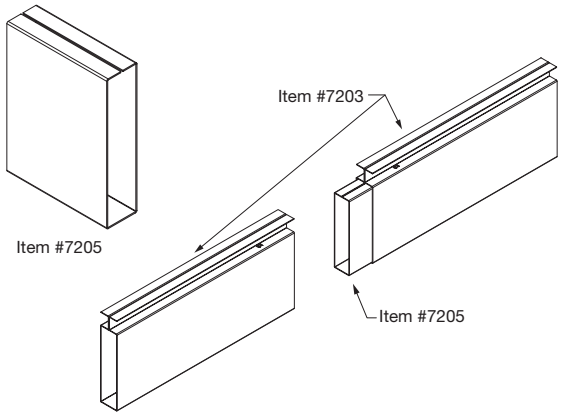

7.6 Cutting of Blades – Classics™

The Field-Cut End Cap enables METALWORKS™ Blades – Classics™ panels to be cut to length and finished on site. Alternatively, custom length blades can be ordered with factory-applied end caps. Any field-cut ends of the panels must be covered with the Field-Cut End Cap to ensure aesthetic standards and aid in safe handling.

Cutting Guidelines:

- MetalWorks Blades – Classics can only be straight cut to length (not at angles) to be compatible with the Field-Cut End Cap.

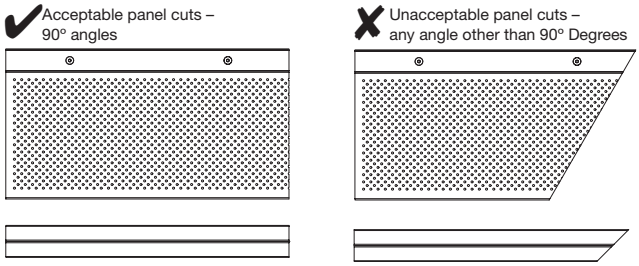

- It is recommended to use a miter saw with a non-ferrous metal cutting blade for thin-walled material (consult blade manufacturer for specific recommendation).
- If a clean cut is not achieved it may be necessary to deburr the edge for proper fit of the end cap.
- Perforated panels contain an acoustic infill bag. This can be cut through during the blade cut and does not need to be resealed before inserting the Field-Cut End Cap.

Field-Cut End Cap Orientation

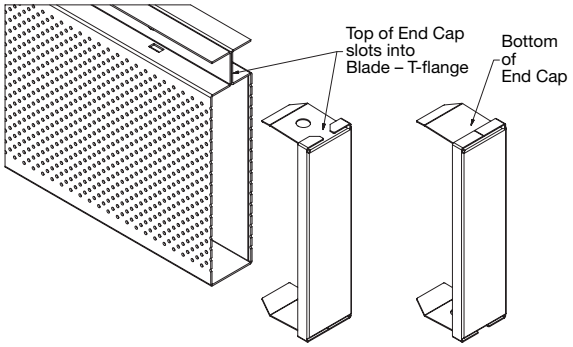

Inserting Field-Cut End Cap

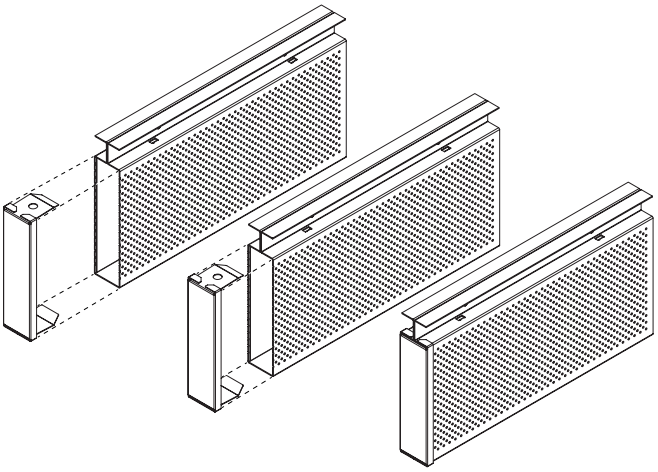

- Field-Cut End Caps are friction fit, and do not require any adhesive or fasteners.
- The notch at the top of the Field-Cut End Cap fits around the T profile of the panel, allowing straight cuts with no additional modification.
- Insert the cap into the cut end of the panel with the notch in the proper orientation.
- Field-Cut End Caps hold the cut end of the panel together, eliminating the need to replace pop rivets through the T profile.
- Field-Cut End Caps cover the cut edge while recreating the perforation border.

7.7 Blades – Classics Panel Face Offset

METALWORKS Blades – Classics panels hang 4-7/8" from the face of the grid.

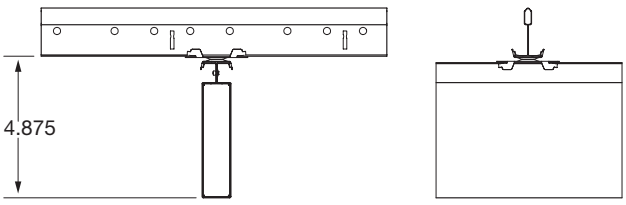

7.8 Directionality and color/finish considerations

In prior installation instructions, Blades – Classics panels had to run perpendicular to the mains. Now, when installing with 360º Painted Grid, or Prelude® Grid, METALWORKS Blades – Classics can run in any direction, including parallel, perpendicular, or on any angle from the mains.

METALWORKS Blades – Classics are finished with factory-applied polyester paint available in White, Silver Grey, Gun Metal Grey, Effects™ Wood Looks finishes, and a wide range of custom colors.

7.9 Acoustical Infill

M15 Diagonal Round perforated metal Blades – Classics panels come with factory-inserted acoustical infill.

8. SPECIAL INSTALLATION CONSIDERATIONS

8.1 Modification to grid related to MEP such as:

- Slopes – METALWORKS Blades – Classics cannot be installed on a slope.
- Single tee insertion – Grid layouts that include single tee insertion connections can be reinforced with the Single Tee Adapter Clip (STAC) which is referenced in document LA297835.

9. SEISMIC INSTALLATIONS (C AND D, E, F)

9.1 For more details on seismic installations please see our brochure: Seismic Design: What You Need to Know https://www.armstrongceilings.com/content/dam/armstrongceilings/commercial/north-america/brochures/seismic-design-what-you-need-to-know-brochure.pdf

9.2 Suspension System

All seismic installations of METALWORKS™ Blades – Classics™ panels must be installed per seismic design categories D, E, F. This is regardless of the total system weight. Prelude® Heavy-Duty grid is required per ASTM E580 and the cross tees may have to match the mains in load-carrying capacity based on the grid layouts as defined in section 4.3.

9.3 Seismic Rx Cat D, E, F

- Ceiling installation should conform to basic requirements established in ASTM C636
- Minimum 7/8" wall molding
- Suspension system must be attached on two adjacent walls. Opposite walls require BERC2 with 3/4" clearance
- BERC2 maintains main beam and cross tee spacing; no other components required
- Heavy-duty systems as identified in ICC-ESR-1308.
- Safety wires required on light fixtures
- Perimeter support wires within 8"
- Ceiling areas over 1,000 SF must have horizontal restraint wire or rigid bracing
- Ceiling areas over 2,500 SF must have seismic separation joints or full height partitions
- Ceilings without rigid bracing must have 2" oversized trim rings for sprinklers and other penetrations
- Changes in ceiling plane must have positive bracing
- Cable trays and electrical conduits must be independently supported and braced.
- Suspended ceilings will be subject to special inspection.
- Suspension layouts are the same as described in section 4: Suspension System.
- Connection to wall – See BPCS-4141 Seismic Design: What You Need to Know – Code Requirements Seismic Rx® Tested Solutions – SEISMIC RX® APPROACHES TO CATEGORY C and D, E, F INSTALLATIONS.
- Special bracing required – See BPCS-4141 Seismic Design: What You Need to Know – Code Requirements Seismic Rx Tested Solutions – Bracing and Restraint for Seismic Installations
- Seismic separation joints – See BPCS-4141 Seismic Design: What You Need to Know – Code Requirements Seismic Rx Tested Solutions – Seismic Separation Joints

9.4 Blades – Classics Panel Attachment

Minimum spacing between Blades – Classics for Seismic Design Categories D, E, F is 6" O.C.

A low-profile framing screw (1/2" sharp point) should be installed through the pilot holes on the Attachment Clip.

Before the Blades – Classics panel is installed, add a screw through the pilot hole on the Attachment Clip into the panel flange. This will secure the clip. This must be done to every Attachment Clip.

After installing the Blades – Classics panel (or a run of vertical panels) to the suspension system, ensure correct positioning of the panel and add one screw through a pilot hole on the clip, through the face of the grid. This will secure the clip to the suspension system. (NOTE: The use of a long shaft adapter may be necessary to install this screw.)

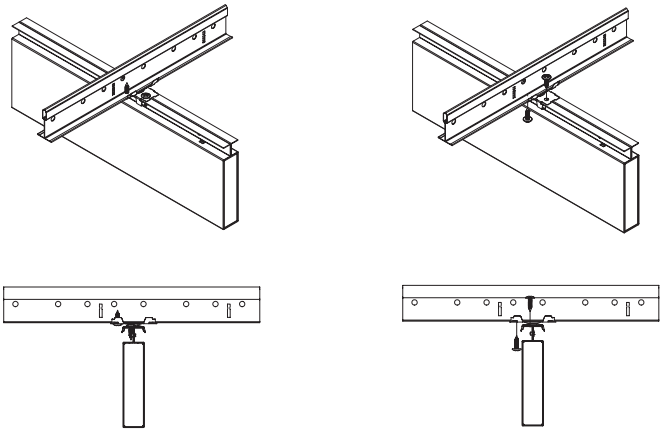

For more details on Seismic installations please see our brochure: Seismic Design: What You Need to Know (https://www.armstrongceilings.com/commercial).

APPENDIX – DESIGN OPTIONS WITH STANDARD GRID LAYOUT

Possible METALWORKS™ Blades – Classics™ Design Layouts
(assumes that these are discontinuous and have no intersection with perimeter walls)

1' X 4' GRID LAYOUT

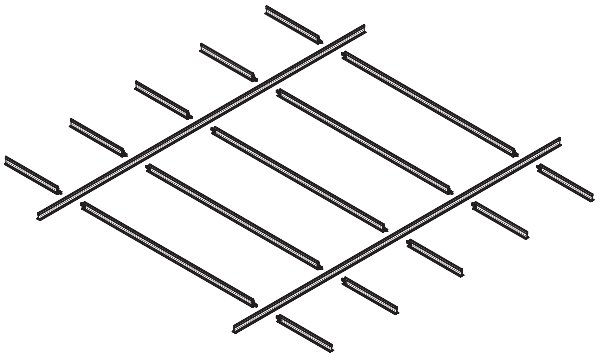

Striated

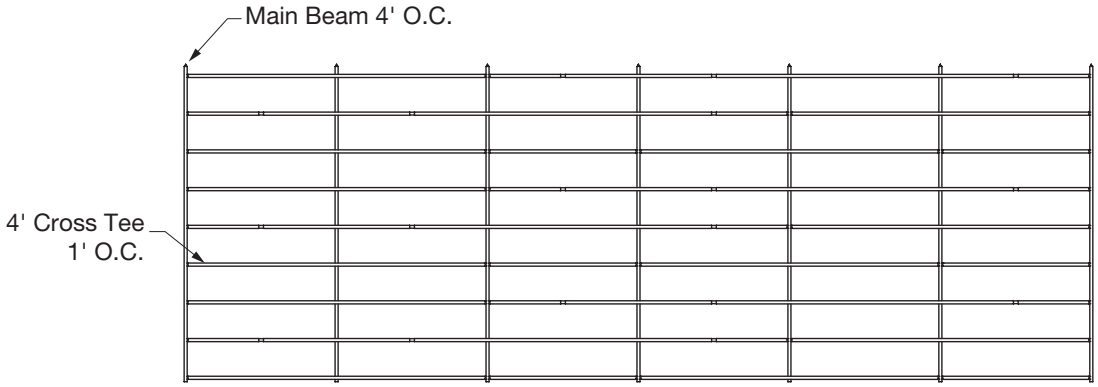

Note: Installation upside down to show Blade placement

Arrows

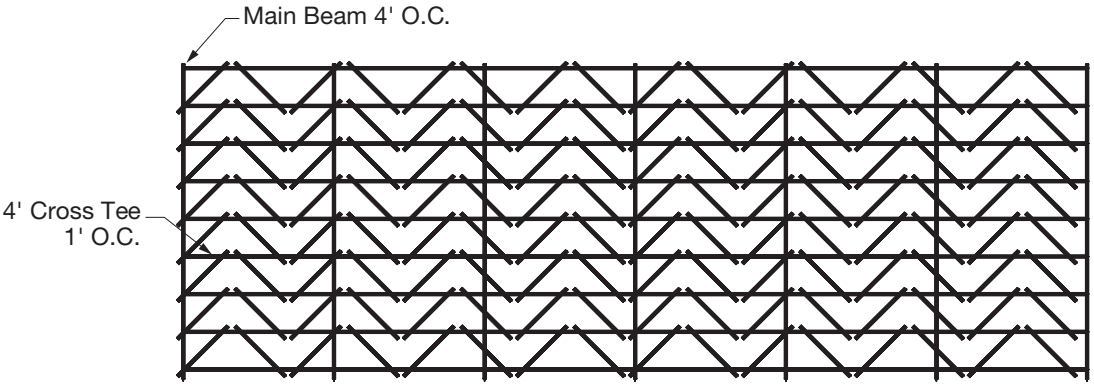

Sunflower

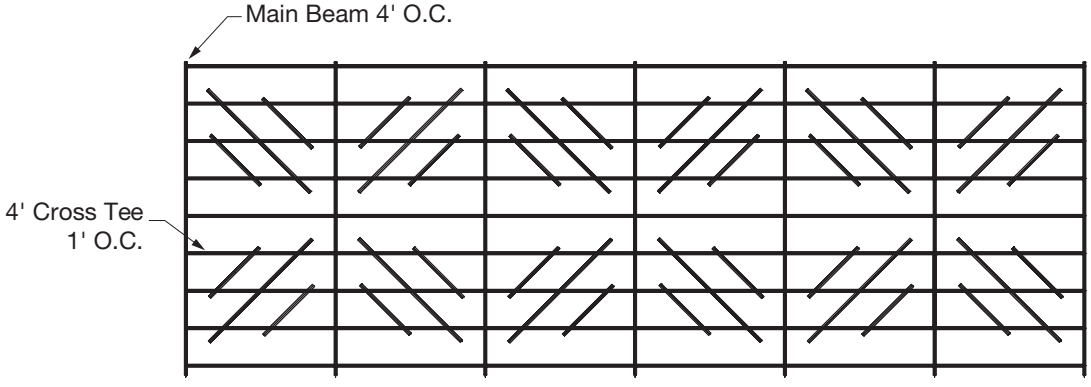

Diagonal 45 Degree

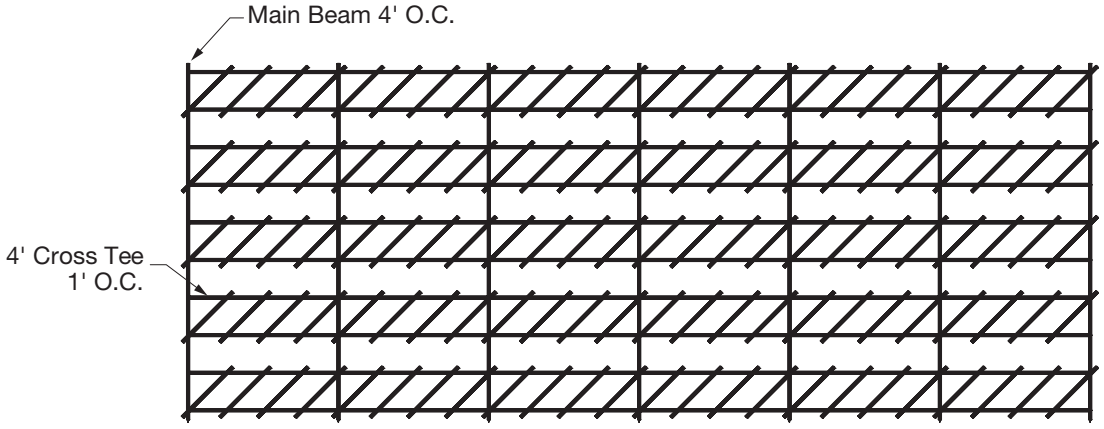

ZigZag

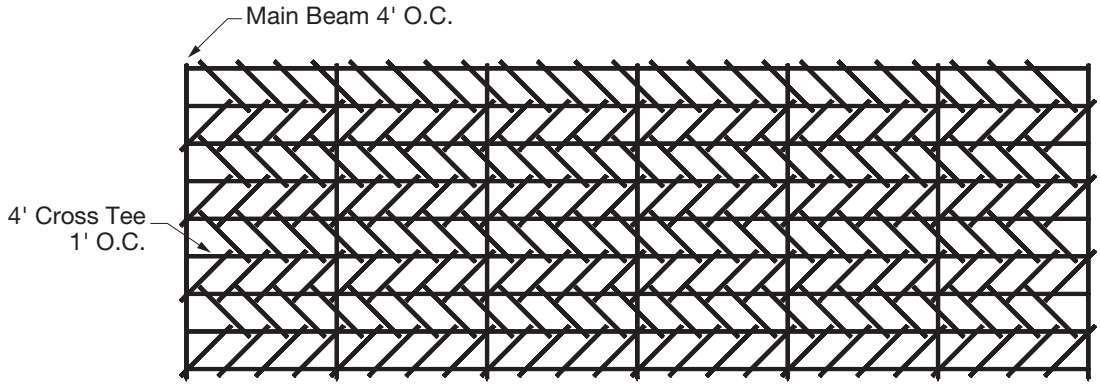

Layered

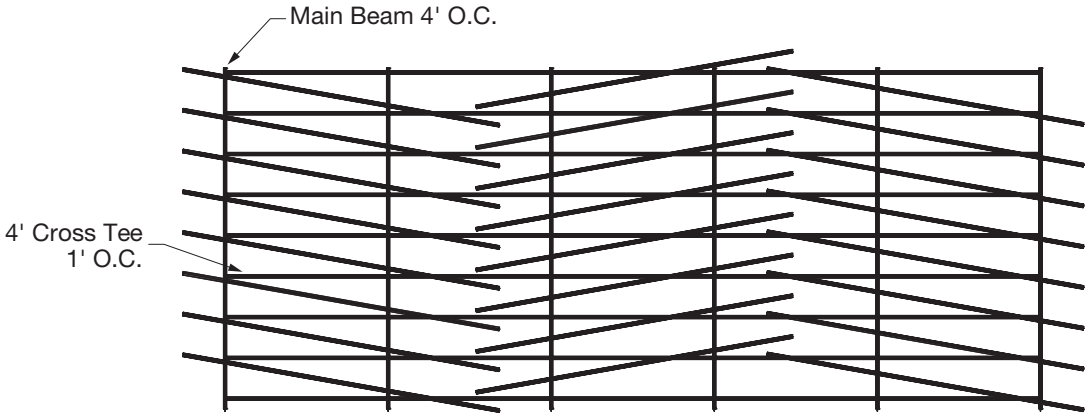

Divergent

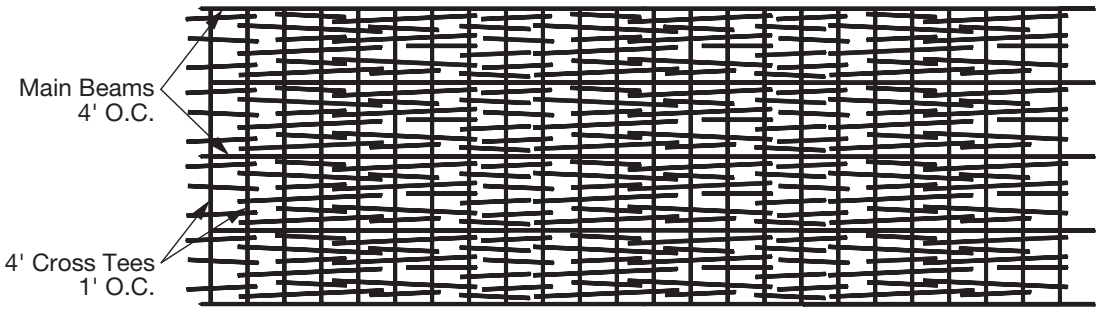

2' X 2' GRID LAYOUT

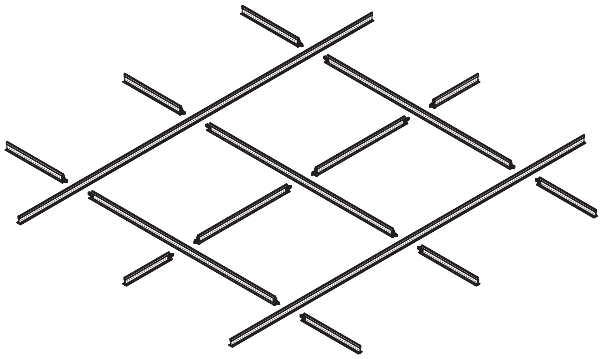

Possible METALWORKS™ Blades – Classics™ Design Layouts
(assumes that these are discontinuous and have no intersection with perimeter walls)

Open Cell

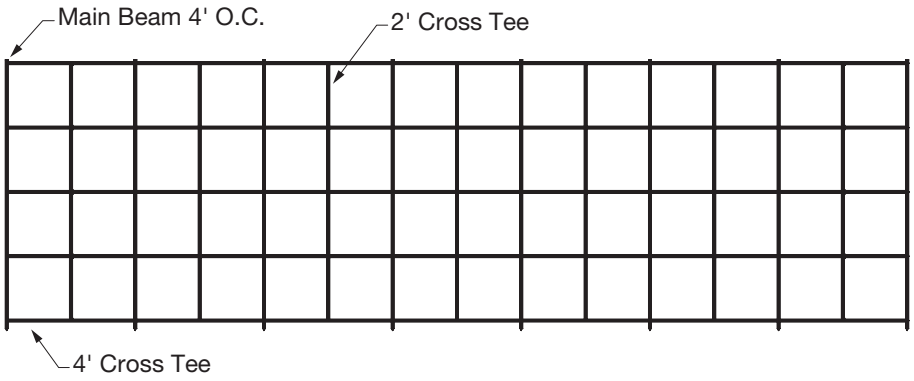

X Cross 90 Degree

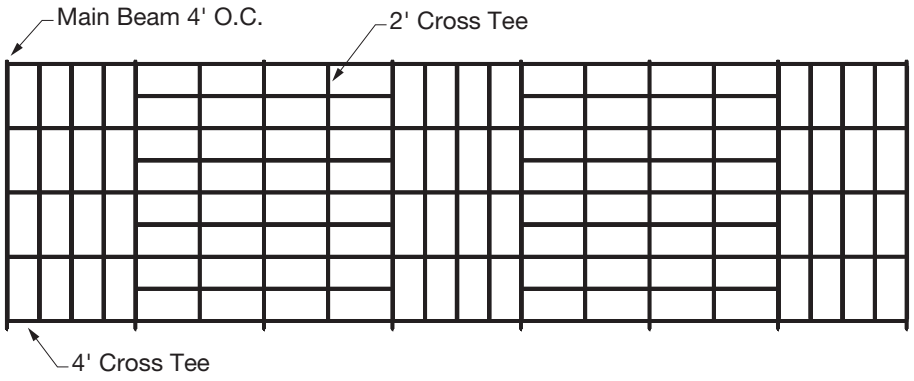

2' X 4' GRID LAYOUT

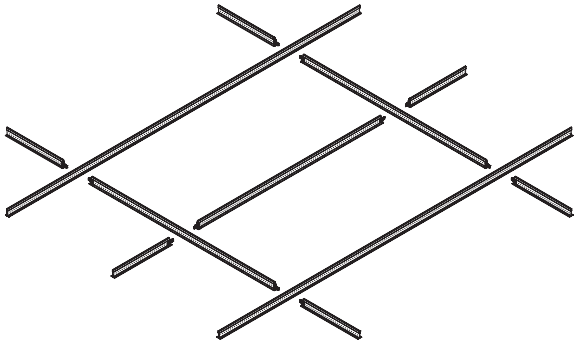

Possible METALWORKS™ Blades – Classics™ Design Layouts
(assumes that these are discontinuous and have no intersection with perimeter walls)

Diagonal Layered 45 Degree

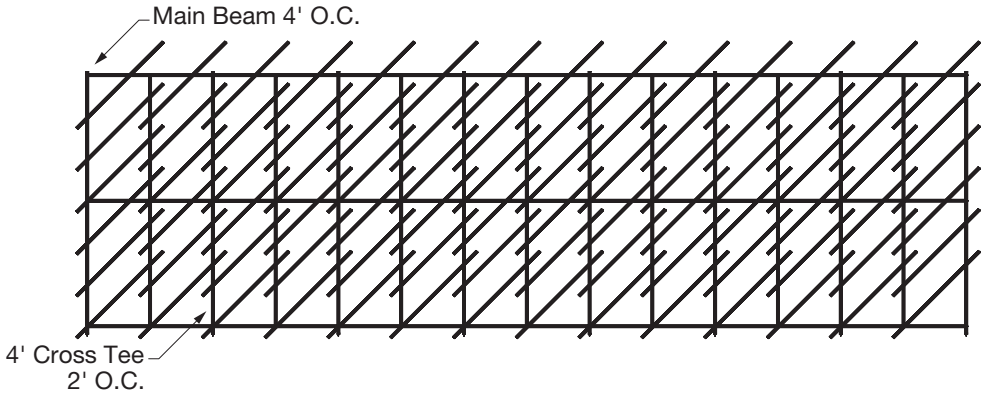

Herringbone

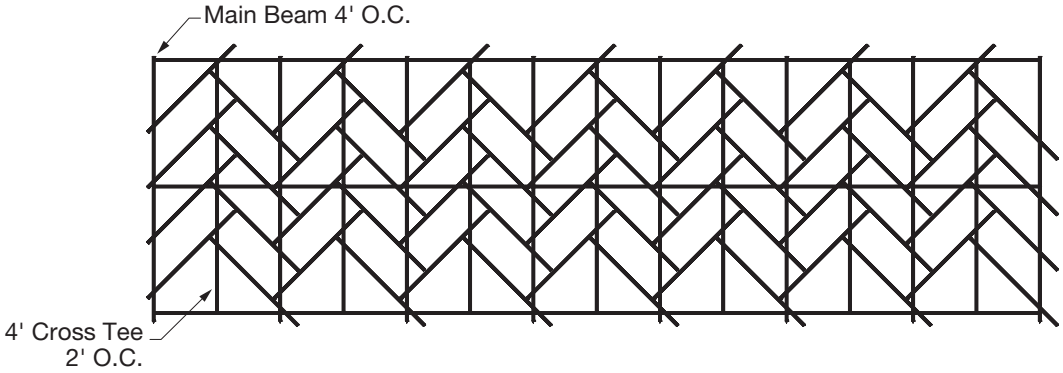

Open Cell

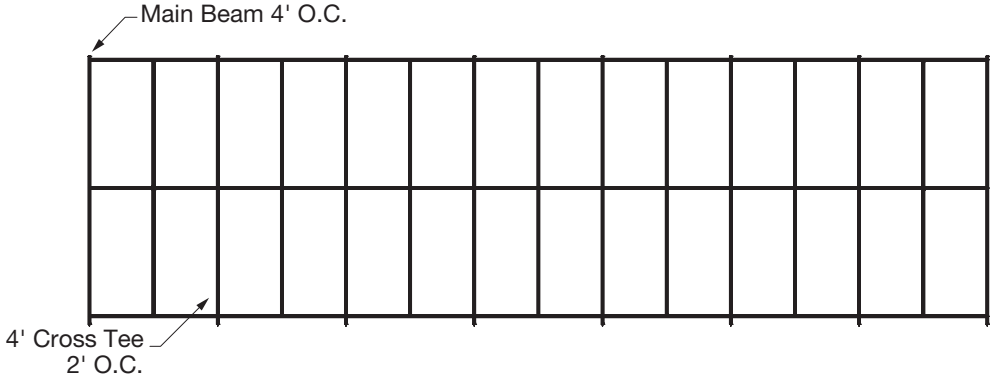

4' X 4' GRID LAYOUT

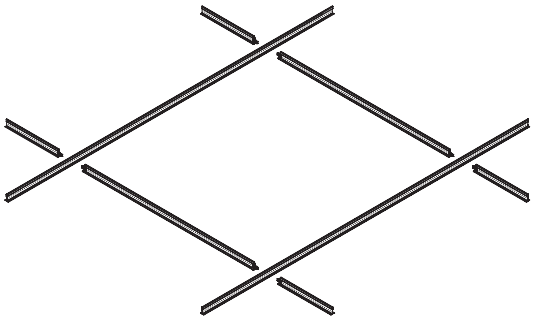

Possible METALWORKS™ Blades – Classics™ Design Layouts
(assumes that these are discontinuous and have no intersection with perimeter walls)

Open Cell

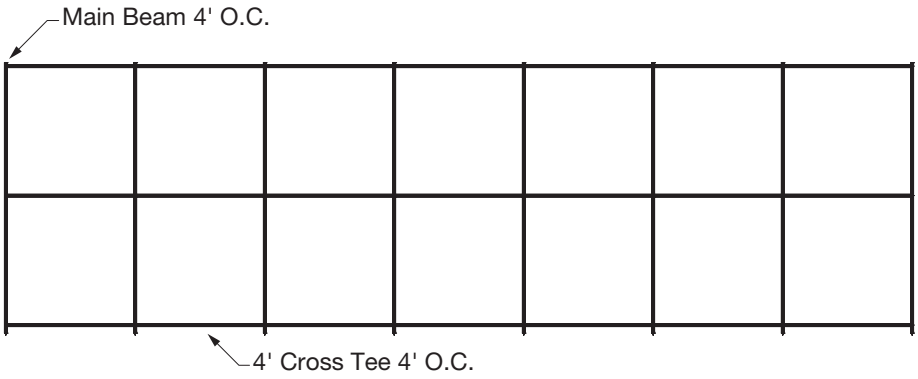

Diagonal 10 Degree

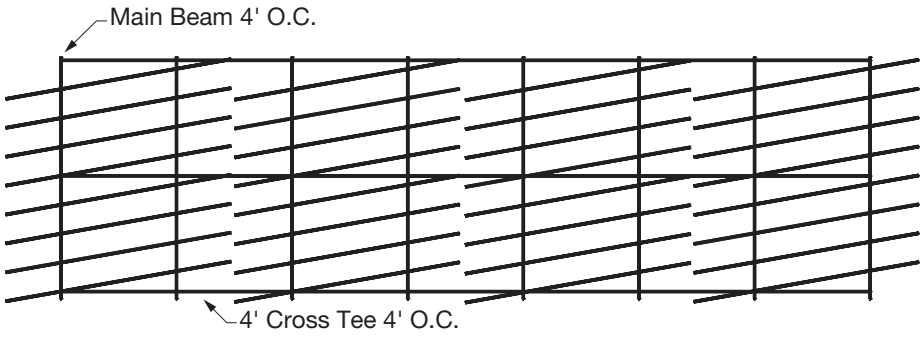

Staggered

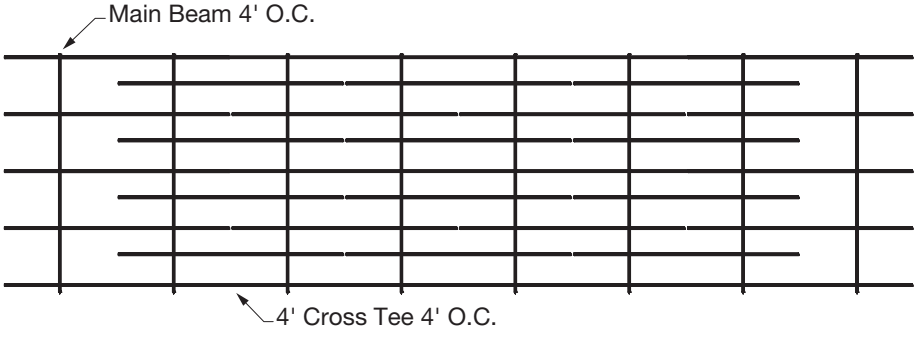

Straight

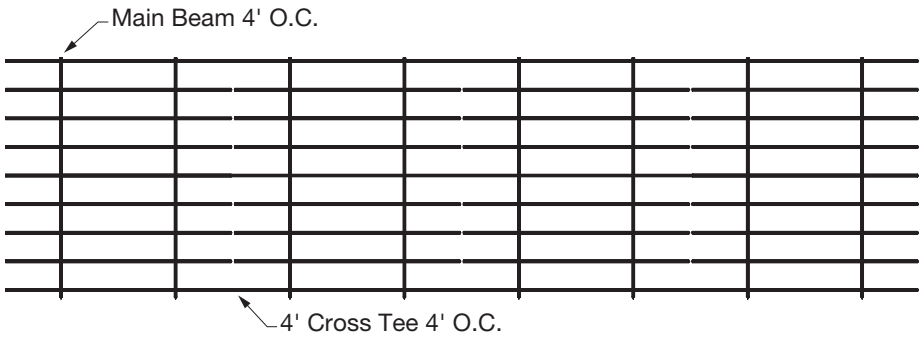

Wave 5 Degree

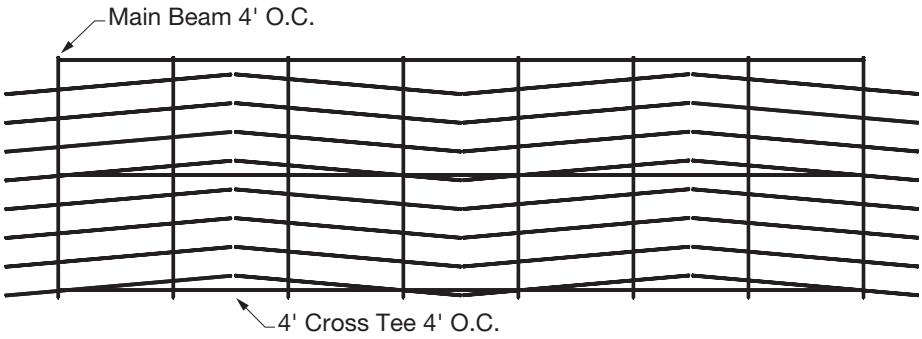

Wave 10 Degree

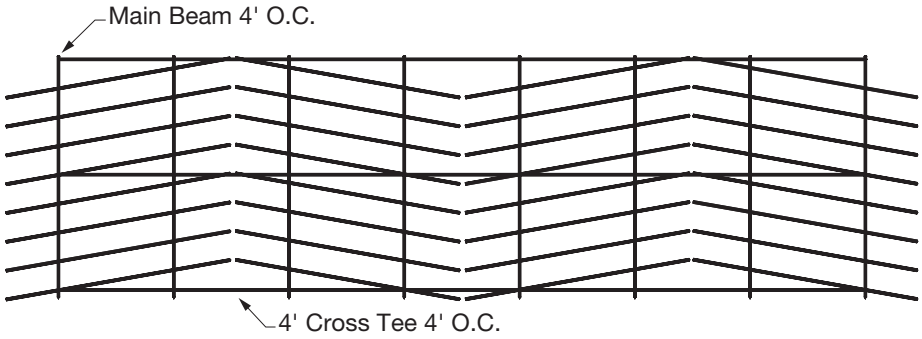

Wave Cross 10 Degree

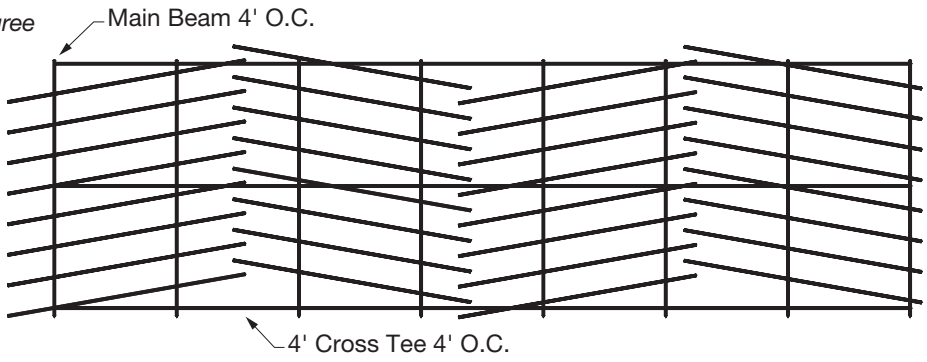

Layered

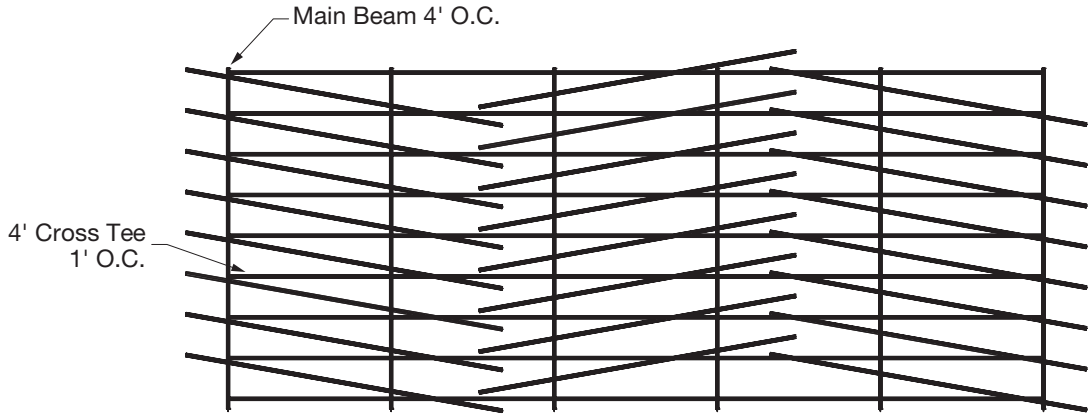

X Cross 5 Degree

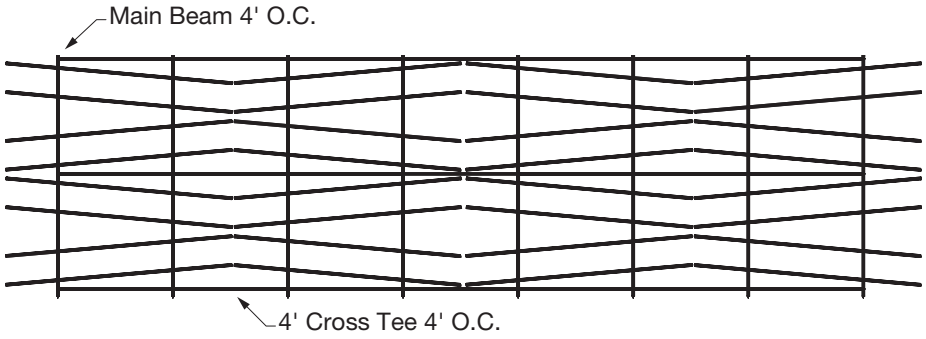

X Triple Cross 5 Degree

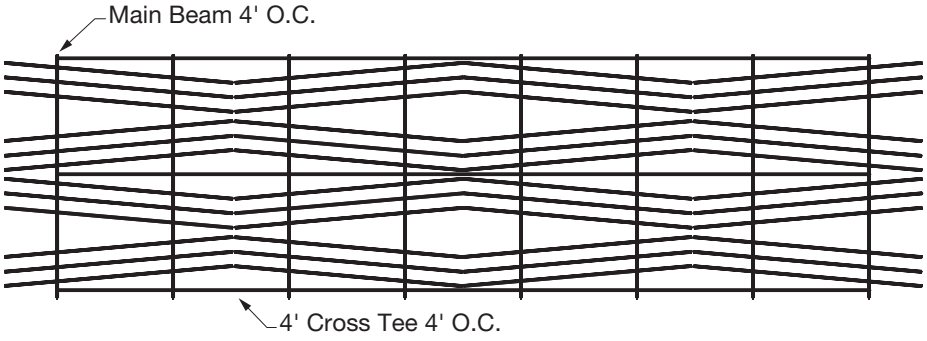

NON-STANDARD GRID LAYOUT

Sunburst

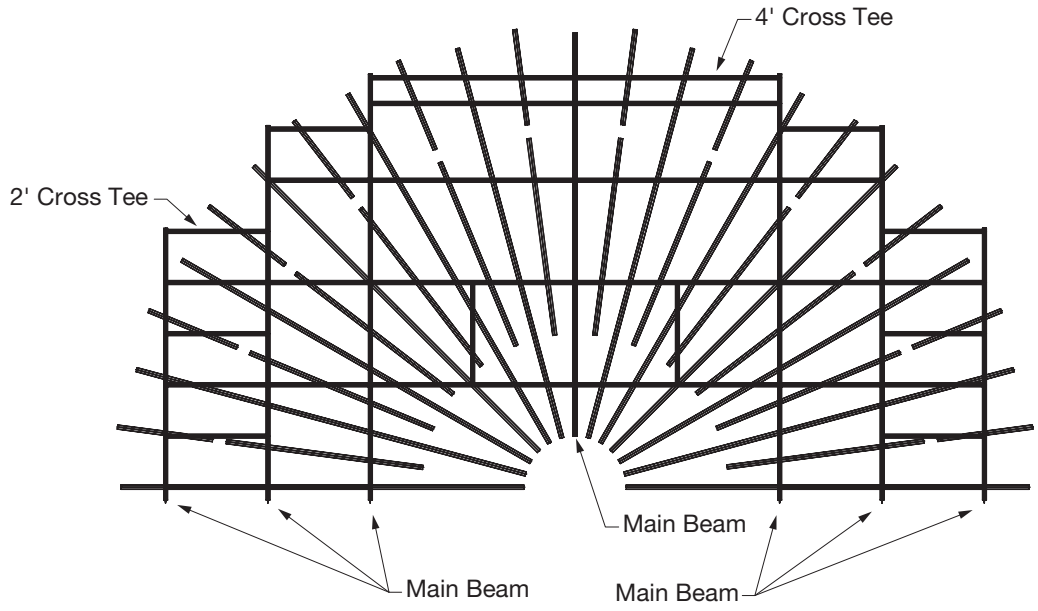

MORE INFORMATION

For more information, or for an Armstrong representative, call 1 877 276 7876.

For complete technical information, detail drawings, CAD design assistance, installation information, and many other technical services, call TechLine at 1 877 276 7876 or FAX 1 800 572 TECH.

For the latest product selection and specification data, visit armstrongceilings.com/metalworks.

Fantastik® is a registered trademark of S. C. JOHNSON & SON, INC.; RAL® is a registered trademark of RAL gGmbH Inspiring Great Spaces® is a registered trademark of AFI Licensing LLC. All other trademarks used herein are the property of AWI Licensing LLC and/or its affiliates.

© 2018 AWI Licensing LLC • Printed in the United States of America

BPLA-298758-318

Armstrong®
CEILING & WALL SOLUTIONS