Armstrong Easy Elegance™ Coffered Ceiling Panels

Install FAQ's

Inspiring Great Spaces®

Armstrong® CEILINGS

Installation Frequently Asked Questions

Design considerations

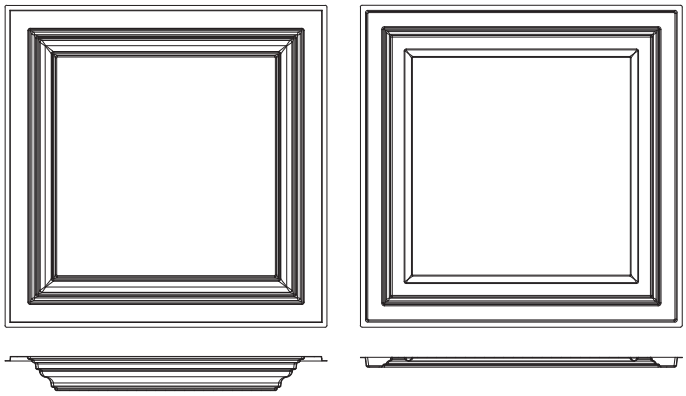

Clearance: Easy Elegance™ panels are installed in drop/suspended ceiling installation using Armstrong Prelude® 15/16" Grid. You will need to have approximately 6" of clearance above face of 1280 Deep Coffer panels or 3" above 1282 Shallow Coffer panels.

Lighting: Easy Elegance™ panels work with most modern light fixtures. Leave 1/8" gap between recessed light housing and panel. Additionally, 1280 panel is 2.5" tall, so light fixtures may require a height extension component to provide clearance above the panel when installed.

Heat Source: Do not install Easy Elegance™ panels (items 1280 and 1282) in direct contact with open flame or a heat source that can exceed 130 degrees fahrenheit. Most recessed lighting options will meet this requirement, especially modern CFL (Compact Fluorescent Lighting) and LED lights.

Cutting Panels for Border/Perimeter: For a clean aesthetic look, cutting panels is not recommended. Two border solutions are recommended using mineral fiber drop ceiling panels or drywall to complete your look.

Perimeter Installation options

Option A: Drywall perimeter

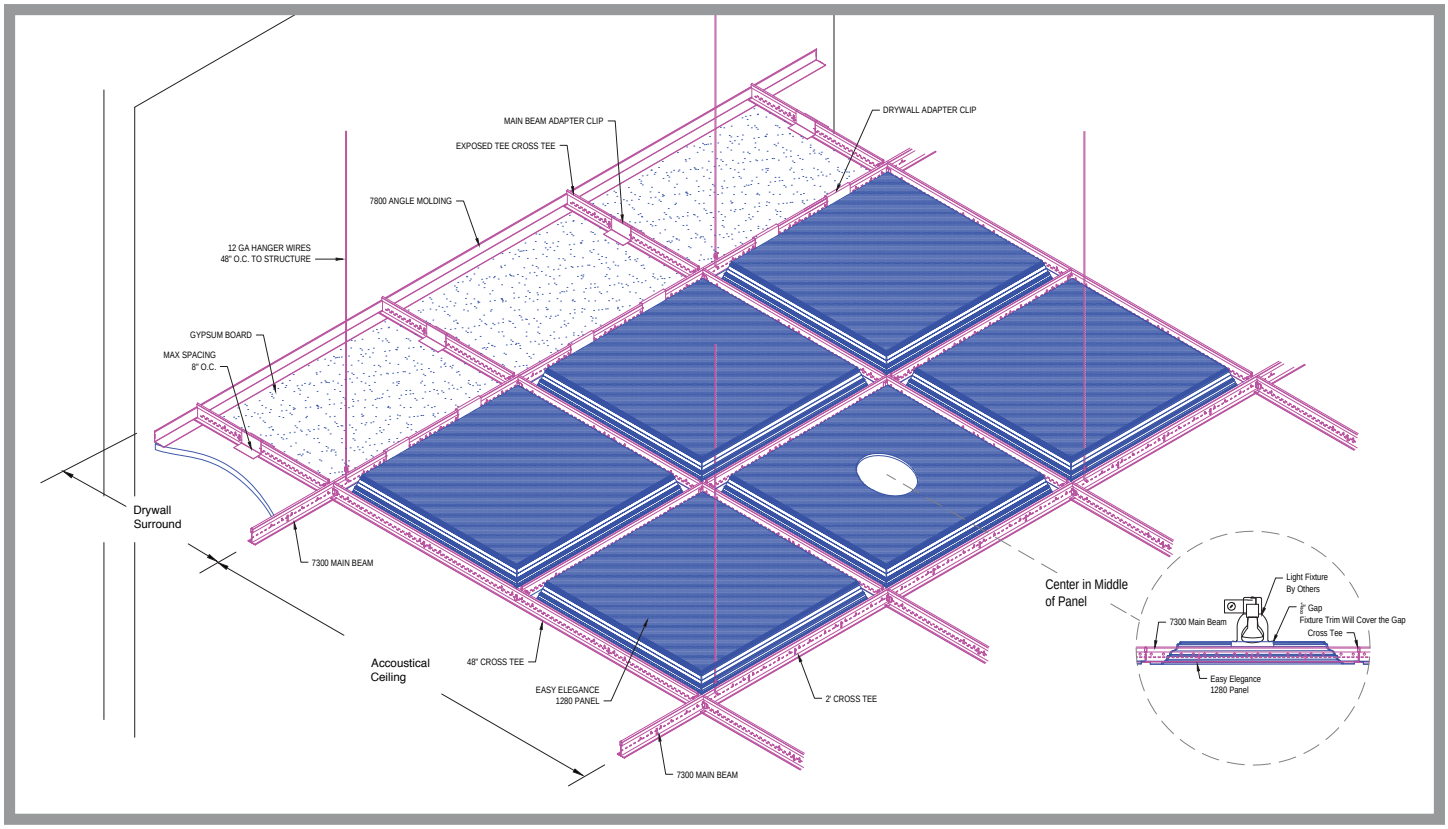

Parts needed: 7300 Prelude® Main Beams and coordinating Cross Tees, MBAC Clip, DWAC Clip, and CHDC Clear Hold down Clip, 1280 or 1282, 1/2" or 5/8" drywall, angle molding, hanger wires and wire fasteners, square edge drywall casing bead (J-channel), Type S 1-1/4" screws, spackle, drywall tape, and paint. ***Please note:*** 7400 Prelude® Main Beam with square bulb and reduced height cannot be used for this installation solution.

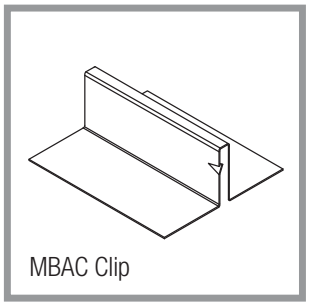

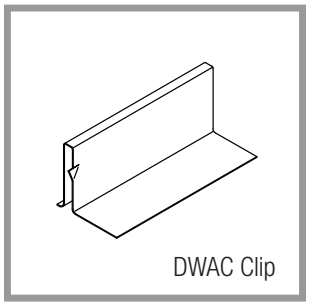

1 – Install your square and level suspension system: angle molding, hanger wires and Prelude® grid with extra wires for lights. Consult local electrical code or lighting fixture manufacturer for all light fixture requirements. Detailed installation directions available on armstrongceilings.com.

2 – Cut coffer panels that will integrate with lighting; leave 1/8" gap between panel and recessed lighting housing. The light fixture trim will cover the gap.

3 – Install lights (need height extensions when using 1280 Deep Coffered panels)
2 1/2" above grid line for 1280 deep coffer panels
7/16" above grid line for 1282 shallow coffer panels

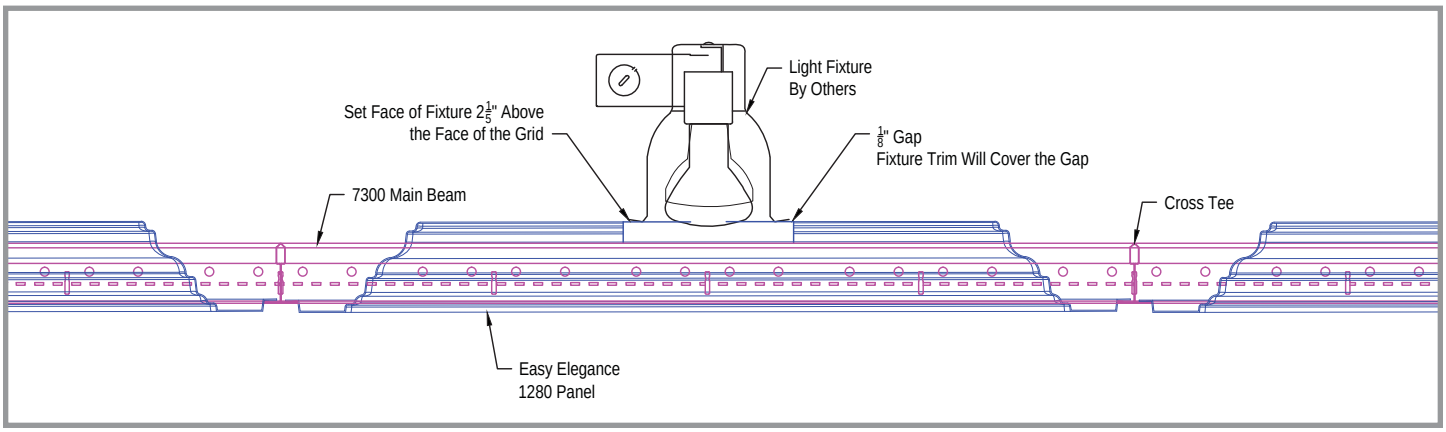

4 – Install DWAC at transition from ceiling panels to drywall and MBAC Clips at 8" intervals on the mains and tees that will support the drywall as shown in image.

5 – Cut Drywall and screw in place (overlap by 1/16"). Border should not exceed 24" to wall

6 – Finish drywall (bead edge, spackle, sand, and paint)

7 – Drop panels into place

8 – Install CHDC clear hold down clip as necessary to keep panels from shifting (possible near doors/windows)

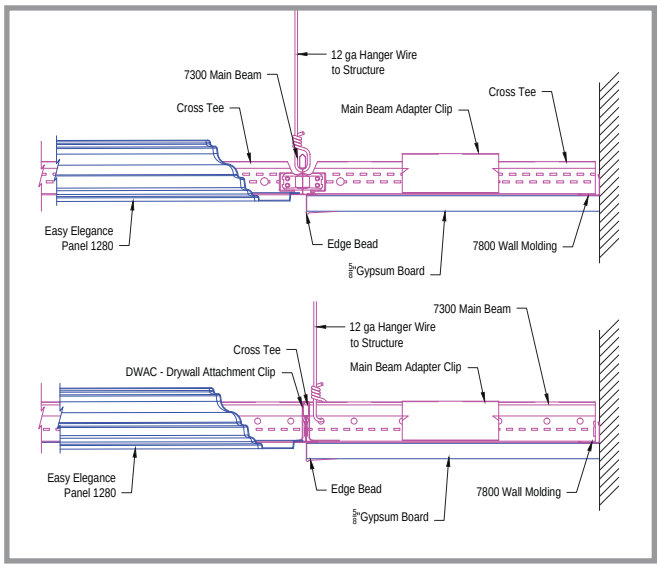

continued on back

Option B: Tegular acoustical drop panel perimeter

Parts needed: 7300 or 7400 Prelude® Main Beams and coordinating tees, CHDC Clear Hold down Clips, 1280 or 1282 Easy Elegance™ panels, tegular acoustic panel such as Sahara item #271, angle molding, hanger wires and wire fasteners.

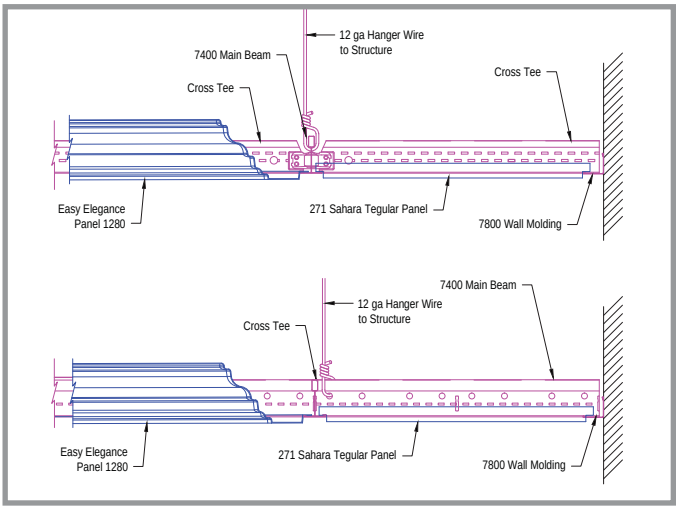

1 – Install your square and level suspension system: angle molding, hanger wires and Prelude® grid with extra wires for lights. Consult local electrical code or lighting fixture manufacturer for all light fixture requirements. Detailed installation directions available on armstrongceilings.com.

2 – Cut coffer panels that will integrate with lighting; leave 1/8" gap between panel and recessed lighting.

3 – Install lights (need height extention when using 1280 panels)

2 1/2" above grid line for 1280 deep coffer panels

7/16" above grid line for 1282 shallow coffer panels

4 – Cut Acoustic Perimeter Panels, using tegular edge cutter tool

5 – Drop 1280 or 1282 into center section and tegular Acoustic Panels into the border

6 – Install CHDC Clear Hold down Clip as necessary to keep panels from shifting (possible near doors/windows)

If you have ceiling questions, call: **1-877-ARMSTRONG (276-7876)**

NOTE: Due to printing limitations, colors pictured cannot be guaranteed to match actual ceiling materials.

Inspiring Great Spaces is a trademark of AFI Licensing LLC.

All other trademarks are property of AWI Licensing LLC or affiliates, or their respective owners.

©2016 AWI Licensing LLC.

Printed in the United States of America

armstrongceilings.com

COVER: 1282BXA EASY ELEGANCE™ SHALLOW COFFER WHITE

Inspiring Great Spaces®

Armstrong® CEILINGS

RC-3592-1116